TMS570LS1225 16- and 32-Bit RISC Flash Microcontroller

1 Device Overview

1.1 Features

- High-Performance Automotive-Grade Microcontroller for Safety-Critical Applications
  - Dual CPUs Running in Lockstep
  - ECC on Flash and RAM Interfaces
  - Built-In Self-Test (BIST) for CPU and On-chip RAMs
  - Error Signaling Module With Error Pin
  - Voltage and Clock Monitoring
- ARM® Cortex®-R4F 32-Bit RISC CPU
  - 1.66 DMIPS/MHz With 8-Stage Pipeline
  - FPU With Single- and Double-Precision
  - 12-Region Memory Protection Unit (MPU)
  - Open Architecture With Third-Party Support
- Operating Conditions
  - Up to 180-MHz System Clock
  - Core Supply Voltage (VCC): 1.14 to 1.32 V
  - I/O Supply Voltage (VCCIO): 3.0 to 3.6 V
- Integrated Memory
  - 1.25MB of Program Flash With ECC
  - 192KB of RAM With ECC
  - 64KB of Flash for Emulated EEPROM With ECC
- 16-Bit External Memory Interface (EMIF)
- Common Platform Architecture
  - Consistent Memory Map Across Family
  - Real-Time Interrupt (RTI) Timer (OS Timer)
  - 128-Channel Vectored Interrupt Module (VIM)
  - 2-Channel Cyclic Redundancy Checker (CRC)
- Direct Memory Access (DMA) Controller
  - 16 Channels and 32 Control Packets
  - Parity Protection for Control Packet RAM
  - DMA Accesses Protected by Dedicated MPU
- Frequency-Modulated Phase-Locked Loop (FMPLL) With Built-In Slip Detector
- Separate Nonmodulating PLL
- IEEE 1149.1 JTAG, Boundary Scan and ARM CoreSight™ Components
- Advanced JTAG Security Module (AJSM)
- Calibration Capabilities
  - Parameter Overlay Module (POM)
- 16 General-Purpose Input/Output (GPIO) Pins Capable of Generating Interrupts
- Enhanced Timing Peripherals for Motor Control
  - 7 Enhanced Pulse Width Modulator (ePWM) Modules
  - 6 Enhanced Capture (eCAP) Modules
  - 2 Enhanced Quadrature Encoder Pulse (eQEP) Modules
- Two Next Generation High-End Timer (N2HET) Modules
  - N2HET1: 32 Programmable Channels
  - N2HET2: 18 Programmable Channels
  - 160-Word Instruction RAM Each With Parity Protection
  - Each N2HET Includes Hardware Angle Generator
  - Dedicated High-End Timer Transfer Unit (HTU) for Each N2HET
- Two 12-Bit Multibuffered Analog-to-Digital Converter (MibADC) Modules
  - ADC1: 24 Channels
  - ADC2: 16 Channels Shared With ADC1
  - 64 Result Buffers Each With Parity Protection
- Multiple Communication Interfaces
  - FlexRay Controller With 2 Channels
    - 8KB of Message RAM With Parity Protection
    - Dedicated FlexRay Transfer Unit (FTU)
  - Three CAN Controllers (DCANs)
    - 64 Mailboxes Each With Parity Protection
    - Compliant to CAN Protocol Version 2.0A and 2.0B
  - Inter-Integrated Circuit (I^2C)
  - Three Multibuffered Serial Peripheral Interface (MibSPI) Modules
    - 128 Words Each With Parity Protection
    - 8 Transfer Groups
  - Up to Two Standard Serial Peripheral Interface (SPI) Modules
  - Two UART (SCI) Interfaces, One With Local Interconnect Network (LIN 2.1) Interface Support
- Packages
  - 144-Pin Quad Flatpack (PGE) [Green]
  - 337-Ball Grid Array (ZWT) [Green]

An IMPORTANT NOTICE at the end of this data sheet addresses availability, warranty, changes, use in safety-critical applications, intellectual property matters and other important disclaimers. PRODUCTION DATA.

1.2 Applications

- Braking Systems (ABS and ESC)
- Electric Power Steering (EPS)
- HEV and EV Inverter Systems
- Battery Management Systems
- Active Driver Assistance Systems
- Aerospace and Avionics
- Railway Communications
- Off-road Vehicles

1.3 Description

The TMS570LS1225 device is a high-performance automotive-grade microcontroller family for safety systems. The safety architecture includes dual CPUs in lockstep, CPU and memory BIST logic, ECC on both the flash and the data SRAM, parity on peripheral memories, and loopback capability on peripheral I/Os.

The TMS570LS1225 device integrates the ARM Cortex-R4F floating-point CPU which offers an efficient 1.66 DMIPS/MHz, and has configurations which can run up to 180 MHz providing up to 298 DMIPS. The device supports the word-invariant big-endian [BE32] format.

The TMS570LS1225 device has 1.25MB of integrated flash and 192KB of data RAM with single-bit error correction and double-bit error detection. The flash memory on this device is a nonvolatile, electrically erasable and programmable memory, implemented with a 64-bit-wide data bus interface. The flash operates on a 3.3-V supply input (same level as I/O supply) for all read, program, and erase operations. When in pipeline mode, the flash operates with a system clock frequency of up to 180 MHz. The SRAM supports single-cycle read and write accesses in byte, halfword, word, and double-word modes throughout the supported frequency range.

The TMS570LS1225 device features peripherals for real-time control-based applications, including two Next Generation High-End Timer (N2HET) timing coprocessors with up to 44 I/O terminals, seven Enhanced Pulse Width Modulator (ePWM) modules with up to 14 outputs, six Enhanced Capture (eCAP) modules, two Enhanced Quadrature Encoder Pulse (eQEP) modules, and two 12-bit Analog-to-Digital Converters (ADCs) supporting up to 24 inputs.

The N2HET is an advanced intelligent timer that provides sophisticated timing functions for real-time applications. The timer is software-controlled, using a reduced instruction set, with a specialized timer micromachine and an attached I/O port. The N2HET can be used for pulse-width-modulated outputs, capture or compare inputs, or general-purpose I/O (GIO). The N2HET is especially well suited for applications requiring multiple sensor information and drive actuators with complex and accurate time pulses. A High-End Timer Transfer Unit (HTU) can perform DMA-type transactions to transfer N2HET data to or from main memory. A Memory Protection Unit (MPU) is built into the HTU.

The ePWM module can generate complex pulse width waveforms with minimal CPU overhead or intervention. The ePWM is easy to use and it supports both high-side and low-side PWM and deadband generation. With integrated trip zone protection and synchronization with the on-chip MibADC, the ePWM module is ideal for digital motor control applications.

The eCAP module is essential in systems where the accurately timed capture of external events is important. The eCAP can also be used to monitor the ePWM outputs or for simple PWM generation when the eCAP is not needed for capture applications.

The eQEP module is used for direct interface with a linear or rotary incremental encoder to get position, direction, and speed information from a rotating machine as used in high-performance motion and position-control systems.

Copyright © 2012–2015, Texas Instruments Incorporated

The device has two 12-bit-resolution MibADCs with 24 total inputs and 64 words of parity-protected buffer RAM each. The MibADC channels can be converted individually or can be grouped by software for sequential conversion sequences. Sixteen inputs are shared between the two MibADCs. Each MibADC supports three separate groupings of channels. Each group can be converted once when triggered or configured for continuous conversion mode. The MibADC has a 10-bit mode for use when compatibility with older devices or faster conversion time is desired. MibADC1 also supports the use of external analog multiplexers.

The device has multiple communication interfaces: three MibSPIs, two SPIs, one LIN, one SCI, three DCANs, one I^2C, and one FlexRay controller with two channels. The SPI provides a convenient method of serial high-speed communications between similar shift-register type devices. The LIN supports the Local Interconnect standard 2.0 and can be used as a UART in full-duplex mode using the standard Non-Return-to-Zero (NRZ) format. The DCAN supports the CAN 2.0 (A and B) protocol standard and uses a serial, multimaster communication protocol that efficiently supports distributed real-time control with robust communication rates of up to 1 Mbps. The DCAN is ideal for systems operating in noisy and harsh environments (for example, automotive and industrial fields) that require reliable serial communication or multiplexed wiring. The FlexRay controller uses a dual-channel serial, fixed time base multimaster communication protocol with communication rates of 10 Mbps per channel. A FlexRay Transfer Unit (FTU) enables autonomous transfers of FlexRay data to and from main CPU memory. Transfers are protected by a dedicated, built-in MPU.

The I2C module is a multimaster communication module providing an interface between the microcontroller and an I^2C-compatible device through the I^2C serial bus. The I^2C supports speeds of 100 and 400 Kbps.

A Frequency-Modulated Phase-Locked Loop (FMPLL) clock module is used to multiply the external frequency reference to a higher frequency for internal use. The Global Clock Module (GCM) manages the mapping between the available clock sources and the device clock domains.

The device also has an External Clock Prescaler (ECP) module that when enabled, outputs a continuous external clock on the ECLK terminal. The ECLK frequency is a user-programmable ratio of the peripheral interface clock (VCLK) frequency. This low-frequency output can be monitored externally as an indicator of the device operating frequency.

The Direct Memory Access (DMA) controller has 16 channels, 32 control packets, and parity protection on its memory. An MPU is built into the DMA to protect memory against erroneous transfers.

The Error Signaling Module (ESM) monitors all device errors and determines whether an interrupt or external error pin (ball) is triggered when a fault is detected. The nERROR terminal can be monitored externally as an indicator of a fault condition in the microcontroller.

The External Memory Interface (EMIF) provides a memory extension to asynchronous and synchronous memories or other slave devices.

A Parameter Overlay Module (POM) enhances the calibration capabilities of application code. The POM can reroute flash accesses to internal memory or to the EMIF, thus avoiding the reprogramming steps necessary for parameter updates in flash.

With integrated safety features and a wide choice of communication and control peripherals, the TMS570LS1225 device is an ideal solution for high-performance real-time control applications with safety-critical requirements.

Table 1-1. Device Information(1)

PART NUMBER	PACKAGE	BODY SIZE
TMS570LS1225ZWT	NFBGA (337)	16.0 mm × 16.0 mm
TMS570LS1225PGE	LQFP (144)	20.0 mm × 20.0 mm

(1) For more information, see Section 9, *Mechanical Packaging and Orderable Information*.

1.4 Functional Block Diagram

NOTE

The block diagram reflects the 337BGA package. Some pins are multiplexed or not available in the 144QFP. For details, see the respective terminal functions tables in Section 4.3.

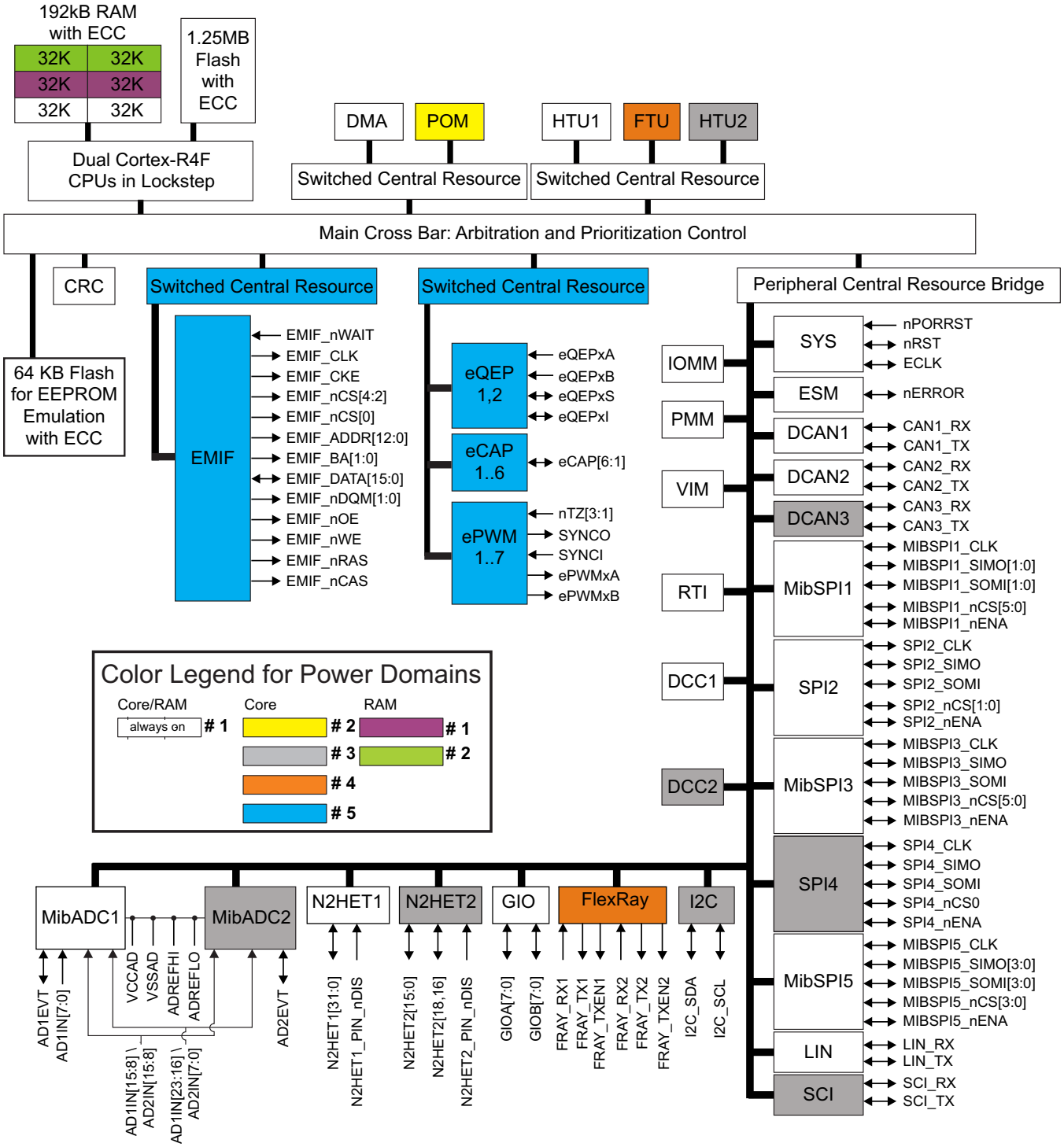

Figure 1-1. Functional Block Diagram

Copyright © 2012–2015, Texas Instruments Incorporated

Table of Contents

1 Device Overview **1**
1.1 Features 1
1.2 Applications 2
1.3 Description 2
1.4 Functional Block Diagram 4
2 Revision History **6**
3 Device Comparison **8**
4 Terminal Configuration and Functions **9**
4.1 PGE QFP Package Pinout (144-Pin) 9
4.2 ZWT BGA Package Ball-Map (337 Ball Grid Array) 10
4.3 Terminal Functions 11
5 Specifications **42**
5.1 Absolute Maximum Ratings Over Operating Free-Air Temperature Range 42
5.2 ESD Ratings 42
5.3 Power-On Hours (POH) 42
5.4 Device Recommended Operating Conditions 43
5.5 Switching Characteristics Over Recommended Operating Conditions for Clock Domains 44
5.6 Wait States Required 44
5.7 Power Consumption Over Recommended Operating Conditions 45
5.8 Input/Output Electrical Characteristics Over Recommended Operating Conditions 46
5.9 Thermal Resistance Characteristics 46
5.10 Output Buffer Drive Strengths 47
5.11 Input Timings 48
5.12 Output Timings 49
5.13 Low-EMI Output Buffers 51
6 System Information and Electrical Specifications **52**
6.1 Device Power Domains 52
6.2 Voltage Monitor Characteristics 52
6.3 Power Sequencing and Power On Reset 54
6.4 Warm Reset (nRST) 56
6.5 ARM Cortex-R4F CPU Information 57
6.6 Clocks 60
6.7 Clock Monitoring 68
6.8 Glitch Filters 70
6.9 Device Memory Map 71
6.10 Flash Memory 77
6.11 Tightly Coupled RAM Interface Module 80
6.12 Parity Protection for Accesses to Peripheral RAMs 80
6.13 On-Chip SRAM Initialization and Testing 82
6.14 External Memory Interface (EMIF) 85
6.15 Vectored Interrupt Manager 93
6.16 DMA Controller 97
6.17 Real Time Interrupt Module 99
6.18 Error Signaling Module 101
6.19 Reset / Abort / Error Sources 105
6.20 Digital Windowed Watchdog 108
6.21 Debug Subsystem 109
7 Peripheral Information and Electrical Specifications **114**
7.1 Enhanced Translator PWM Modules (ePWM) 114
7.2 Enhanced Capture Modules (eCAP) 119
7.3 Enhanced Quadrature Encoder (eQEP) 121
7.4 Multibuffered 12bit Analog-to-Digital Converter 122
7.5 General-Purpose Input/Output 134
7.6 Enhanced High-End Timer (N2HET) 135
7.7 FlexRay Interface 139
7.8 Controller Area Network (DCAN) 141
7.9 Local Interconnect Network Interface (LIN) 142
7.10 Serial Communication Interface (SCI) 143
7.11 Inter-Integrated Circuit (I2C) 144
7.12 Multibuffered / Standard Serial Peripheral Interface 147
8 Device and Documentation Support **159**
8.1 Device and Development-Support Tool Nomenclature 159
8.2 Documentation Support 161
8.3 Trademarks 161
8.4 Electrostatic Discharge Caution 161
8.5 Glossary 161
8.6 Device Identification 162
8.7 Module Certifications 164
9 Mechanical Packaging and Orderable Information **171**
9.1 Packaging Information 171

Copyright © 2012–2015, Texas Instruments Incorporated

2 Revision History

This data manual revision history highlights the technical changes made to the SPNS191A device-specific data manual addendum to make it an SPNS191B revision.

Scope: Applicable updates to the Hercules™ TMS570 MCU device family, specifically relating to the TMS570LS1225 devices, which are now in the production data (PD) stage of development have been incorporated.

Changes from September 1, 2013 to February 28, 2015 (from A Revision (September 2013) to B Revision) **Page**

- Updated/Changed section title to "Device Overview" 1
- Updated/changed the N2HET feature 1
- Added Table 1-1, *Device Information* 3
- Added Section 3, *Device Comparison* 8
- Updated/Changed section title to "Terminal Configuration and Functions" 9
- Table 4-2 (PGE Enhanced High-End Timer Modules (N2HET)) Updated/Changed N2HET1 time input capture or output compare pin description 13
- Table 4-2 Updated/Changed N2HET2 time input capture or output compare pin description 14
- Table 4-5Updated/Changed the EPWM1SYNCI Signal Type from "Output" to "Input" 15
- Table 4-5Updated/Changed the EPWM1SYNCI pin description from "Output" to "Input" 15
- Table 4-16 (PGE Test and Debug Modules Interface): Updated/Changed TEST pin description 21
- Table 4-22 (ZWT Enhanced High-End Timer Modules (N2HET)) Updated/Changed N2HET1 time input capture or output compare pin description 25
- Table 4-22 Updated/Changed N2HET2 time input capture or output compare pin description 26
- Updated/Changed the EPWM1SYNCI pin description from "Output" to "Input" 28
- Table 4-34 (External Memory Interface (EMIF)): Global: Deleted EMIF_RNW pin function 33
- Table 4-37 (ZWT Test and Debug Modules Interface): Updated/Changed TEST pin description 36
- Updated/Changed section title to "Specifications" 42
- Moved Storage temperature range, T_{stg} back to Section 5.1, *Absolute Maximum Ratings Over Operating Free-Air Temperature Range* 42
- Added Section 5.2, *Handling Ratings (Automotive)* 42
- Added Section 5.3, *Power-On-Hours (POH)* 42
- Moved *Thermal Data* section here. 46
- Section 5.9 (Thermal Resistance Characteristics): Updated/Changed title from "Thermal Data" to "Thermal Resistance Characteristics" 46
- Added Θ_{JA} test conditions and added Ψ_{JT} for PGE package 46
- Added Θ_{JA} test conditions and added Ψ_{JT} for ZWT package 47
- Clarified impact of SPI2PC9 register on drive strength of SPI2SOMI pin 48
- Changed the number of cycles of $t_{v(RST)}$ from 2252 to 2256 56
- Figure 6-7 (Device Clock Domains): Added VCLK4 (to ePWM, eQEP, eCAP) 66
- Table 6-22 (Flash Memory Banks and Sectors): Added associated footnotes 77
- Figure 6-10 (TCRAM Block Diagram): Updated/Changed figure 80
- Added table notes identifying address ranges of ESRAM PBIST groups 82
- Updated/Changed N2HET2 RAM ending address from "0xFF**57**FFFF" to "0xFF**45**FFFF" in Table 6-26, *Memory Initialization* 84
- Updated EMIF Timings 85
- Changed maximum addressable size of asynchronous memories from 16MB to 32KB 85
- Updated/Changed the EMIF address bus signals from "EMIF_ADDR[21:0]" to "EMIF_ADDR[12:0]" for all figures in Section 6.14.2, *Electrical and Timing Specifications* 85
- Updated/Changed EMIF address from "EMIF_ADDR[21:0]" to "EMIF_ADDR[12:0]" 85
- Changed EMIF $t_{su(EMDV-EMOEH)}$ from 30nS to 9nS 87
- Changed EMIF $t_{h(EMOEH-EMDIV)}$ from 0.5nS to 0nS 87
- Changed EMIF $t_{su(EMOEL-EMWAIT)}$ from 4E+30nS to 4E+9nS 87
- Changed EMIF $t_{su(EMWEL-EMWAIT)}$ from 4E+30nS to 4E+14nS 87
- Changed EMIF $t_{su(EMCEL-EMOEL)}$ from (RS)*E-5 to (RS)*E-6 88
- Changed EMIF $t_{su(EMCEL-EMOEL)}$ from -5 to -6 88
- Changed EMIF $t_{h(EMOEH-EMCEH)}$ from (RH)*E -4 to (RH)*E -3 88
- Changed EMIF $t_{h(EMOEH-EMCEH)}$ from (RH)*E +4 to (RH)*E +5 88
- Changed EMIF $t_{h(EMOEH-EMCEH)}$ from -4 to -3 88

Copyright © 2012–2015, Texas Instruments Incorporated

- Changed EMIF $t_{h(EMOEH-EMCEH)}$ from +4 to +5 88
- Changed EMIF $t_{su(EMBAV-EMOEL)}$ from (RS)*E-5 to (RS)*E-6 88
- Changed EMIF $t_{h(EMOEH-EMBAIV)}$ from (RS)*E-4 to (RS)*E-3 88
- Changed EMIF $t_{su(EMAV-EMOEL)}$ from (RS)*E-5 to (RS)*E-6 88
- Changed EMIF $t_{h(EMOEH-EMAIV)}$ from (RS)*E-4 to (RS)*E-3 88
- Changed EMIF $t_{d(EMWAITH-EMOEH)}$ from 3E-3 to 3E+9 88
- Changed EMIF $t_{d(EMWAITH-EMOEH)}$ from 4E+30 to 4E+20 88
- Changed EMIF $t_{su(EMDQMV-EMOEL)}$ from (RS)*E-5 to (RS)*E-6 88
- Changed EMIF $t_{h(EMOEH-EMDQMIV)}$ from (RS)*E-4 to (RS)*E-3 88
- Changed EMIF $t_{su(EMCEL-EMWEL)}$ from (WS)*E -4 to (WS)*E -3 89
- Changed EMIF $t_{su(EMCEL-EMWEL)}$ from -4 to -3 89
- Changed EMIF $t_{h(EMWEH-EMCEH)}$ from (WS)*E -4 to (WS)*E -3 89
- Changed EMIF $t_{h(EMWEH-EMCEH)}$ from -4 to -3 89
- Changed EMIF $t_{su(EMDQMV-EMWEL)}$ from (WS)*E -4 to (WS)*E -3 89
- Changed EMIF $t_{h(EMWEH-EMDQMIV)}$ from (WS)*E -4 to (WS)*E -3 89
- Changed EMIF $t_{su(EMBAV-EMWEL)}$ from (WS)*E -4 to (WS)*E -3 89
- Changed EMIF $t_{h(EMWEH-EMBAIV)}$ from (WS)*E -4 to (WS)*E -3 89
- Changed EMIF $t_{su(EMAV-EMWEL)}$ from (WS)*E -4 to (WS)*E -3 89
- Changed EMIF $t_{h(EMWEH-EMAIV)}$ from (WS)*E -4 to (WS)*E -3 89
- Changed EMIF $t_{d(EMWAITH-EMWEH)}$ from 3E-4 to 3E+11 89
- Changed EMIF $t_{d(EMWAITH-EMWEH)}$ from 4E+30 to 4E+24 89
- Changed EMIF $t_{su(EMDV-EMWEL)}$ from (WS)*E -4 to (WS)*E -3 89
- Changed EMIF $t_{h(EMWEH-EMDIV)}$ from (WS)*E -4 to (WS)*E -3 89
- Changed EMIF $t_{su(EMDQMV-EMWEL)}$ from (WS)*E -4 to (WS)*E -3 89
- Changed EMIF $t_{h(EMWEH-EMDQMIV)}$ from (WS)*E -4 to (WS)*E -3 89
- Added JTAG ID for revision C silicon 109
- Revised description of ePWM Trip Zone Timing Requirement $t_{w(TZ)}$ 118
- Corrected SPI table note describing Master mode, phase = 0 condition 151
- Added Device Identification code for revision C silicon 162
- Changed address of die identification registers 162
- Updated/Changed the section title to "Mechanical Packaging and Orderable Information" 171
- Section 9.1 (Packaging Information): Updated/Changed paragraph 171

3 Device Comparison

Table 3-1 lists the features of the TMS570LS1225 devices.

Table 3-1. TMS570LS1225 Device Comparison(1)(2)

FEATURES	DEVICES						
Generic Part Number	**TMS570LS3137ZWT**(3)	**TMS570LS1227ZWT**(3)	TMS570LS1225ZWT	TMS570LS1225PGE	TMS570LS0714PGE	TMS570LS0714PZ	TMS570LS0432PZ
Package	337 BGA	337 BGA	337 BGA	144 QFP	144 QFP	100 QFP	100 QFP
CPU	ARM Cortex-R4F	ARM Cortex-R4F	ARM Cortex-R4F	ARM Cortex-R4F	ARM Cortex-R4F	ARM Cortex-R4F	ARM Cortex-R4
Frequency (MHz)	180	180	180	160	160	100	80
Flash (KB)	3072	1280	1280	1280	768	768	384
RAM (KB)	256	192	192	192	128	128	32
Data Flash [EEPROM] (KB)	64	64	64	64	64	64	16
EMAC	10/100	10/100	–	–	–	–	–
FlexRay	2-ch	2-ch	2-ch	2-ch	–	–	–
CAN	3	3	3	3	3	2	2
MibADC 12-bit (Ch)	2 (24ch)	2 (24ch)	2 (24ch)	2 (24ch)	2 (24ch)	2 (16ch)	1 (16ch)
N2HET (Ch)	2 (44)	2 (44)	2 (44)	2 (40)	2 (40)	2 (21)	1 (19)
ePWM Channels	–	14	14	14	14	8	–
eCAP Channels	–	6	6	6	6	4	0
eQEP Channels	–	2	2	2	2	1	1
MibSPI (CS)	3 (6 + 6 + 4)	3 (6 + 6 + 4)	3 (6 + 6 + 4)	3 (5 + 6 + 1)	3 (5 + 6 + 4)	2 (5 + 1)	1 (4)
SPI (CS)	2 (2 + 1)	2 (2 + 1)	2 (2 + 1)	1 (1)	1 (1)	1 (1)	2
SCI (LIN)	2 (1 with LIN)	2 (1 with LIN)	2 (1 with LIN)	2 (1 with LIN)	2 (1 with LIN)	1 (with LIN)	1 (with LIN)
I2C	1	1	1	1	1	–	–
GPIO (INT)(4)	144 (with 16 interrupt capable)	101 (with 16 interrupt capable)	101 (with 16 interrupt capable)	58 (with 4 interrupt capable)	64 (with 10 interrupt capable)	45 (with 9 interrupt capable)	45 (with 8 interrupt capable)
EMIF	16-bit data	16-bit data	16-bit data	–	–	–	–
ETM (Trace)	32-bit	–	–	–	–	–	–
RTP/DMM	YES	–	–	–	–	–	–
Operating Temperature	-40ºC to 125ºC	-40ºC to 125ºC	-40ºC to 125ºC	-40ºC to 125ºC	-40ºC to 125ºC	-40ºC to 125ºC	-40ºC to 125ºC
Core Supply (V)	1.14 V – 1.32 V	1.14 V – 1.32 V	1.14 V – 1.32 V	1.14 V – 1.32 V	1.14 V – 1.32 V	1.14 V – 1.32 V	1.14 V – 1.32 V
I/O Supply (V)	3.0 V – 3.6 V	3.0 V – 3.6 V	3.0 V – 3.6 V	3.0 V – 3.6 V	3.0 V – 3.6 V	3.0 V – 3.6 V	3.0 V – 3.6 V

(1) For additional device variants, see www.ti.com/tms570
(2) This table reflects the maximum configuration for each peripheral. Some functions are multiplexed and not all pins are available at the same time.
(3) Superset device.
(4) Total number of pins that can be used as general purpose input or output when not used as part of a peripheral.

Copyright © 2012–2015, Texas Instruments Incorporated

4 Terminal Configuration and Functions

4.1 PGE QFP Package Pinout (144-Pin)

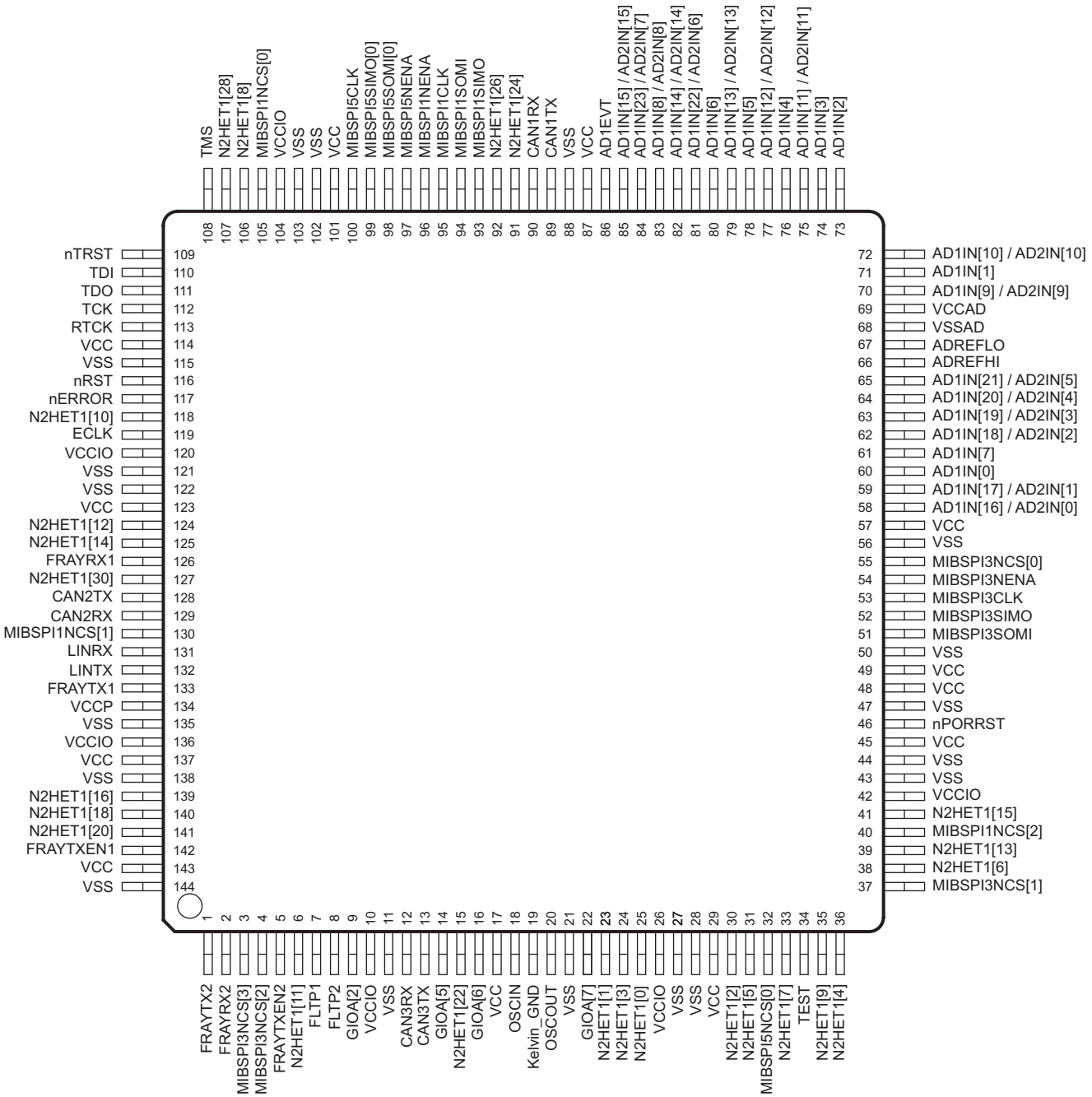

Figure 4-1. PGE QFP Package Pinout (144-Pin)

Note: Pins can have multiplexed functions. Only the default function is depicted in above diagram.

4.2 ZWT BGA Package Ball-Map (337 Ball Grid Array)

	A	B	C	D	E	F	G	H	J	K	L	M	N	P	R	T	U	V	W	
19	VSS	VSS	TMS	N2HET1 [10]	MIBSPI5 NCS[0]	MIBSPI1 SIMO	MIBSPI1 NENA	MIBSPI5 CLK	MIBSPI5 SIMO[0]	N2HET1 [28]	NC	CAN3RX	AD1EVT	AD1IN[15] / AD2IN[15]	AD1IN[22] / AD2IN[6]	AD1IN [6]	AD1IN[11] / AD2IN[11]	VSSAD	VSSAD	19
18	VSS	TCK	TDO	nTRST	N2HET1 [8]	MIBSPI1 CLK	MIBSPI1 SOMI	MIBSPI5 NENA	MIBSPI5 SOMI[0]	N2HET1 [0]	NC	CAN3TX	NC	AD1IN[8] / AD2IN[8]	AD1IN[14] / AD2IN[14]	AD1IN[13] / AD2IN[13]	AD1IN [4]	AD1IN [2]	VSSAD	18
17	TDI	nRST	NC	EMIF_ nWE	MIBSPI5 SOMI[1]	NC	MIBSPI5 SIMO[3]	MIBSPI5 SIMO[2]	N2HET1 [31]	EMIF_ nCS[3]	EMIF_ nCS[2]	EMIF_ nCS[4]	EMIF_ nCS[0]	NC	AD1IN [5]	AD1IN [3]	AD1IN[10] / AD2IN[10]	AD1IN [1]	AD1IN[9] / AD2IN[9]	17
16	RTCK	FRAY TXEN1	NC	EMIF_ BA[1]	MIBSPI5 SIMO[1]	NC	MIBSPI5 SOMI[3]	MIBSPI5 SOMI[2]	NC	NC	NC	NC	NC	NC	AD1IN[23] / AD2IN[7]	AD1IN[12] / AD2IN[12]	AD1IN[19] / AD2IN[3]	ADREFLO	VSSAD	16
15	FRAY RX1	FRAY TX1	NC	NC	NC	NC	NC	NC	NC	EMIF_ DATA[0]	EMIF_ DATA[1]	EMIF_ DATA[2]	EMIF_ DATA[3]	NC	NC	AD1IN[21] / AD2IN[5]	AD1IN[20] / AD2IN[4]	ADREFHI	VCCAD	15
14	N2HET1 [26]	nERROR	NC	NC	NC	VCCIO	VCCIO	VCCIO	VCC	VCC	VCCIO	VCCIO	VCCIO	VCCIO	NC	NC	AD1IN[18] / AD2IN[2]	AD1IN [7]	AD1IN [0]	14
13	N2HET1 [17]	N2HET1 [19]	NC	NC	EMIF_BA[0]	VCCIO								VCCIO	NC	NC	AD1IN[17] / AD2IN[1]	AD1IN[16] / AD2IN[0]	NC	13
12	ECLK	N2HET1 [4]	NC	NC	EMIF_nOE	VCCIO		VSS	VSS	VCC	VSS	VSS		VCCIO	NC	MIBSPI5 NCS[3]	NC	NC	NC	12
11	N2HET1 [14]	N2HET1 [30]	NC	NC	EMIF_ nDQM[1]	VCCIO		VSS	VSS	VSS	VSS	VSS		VCCPLL	NC	NC	NC	NC	NC	11
10	CAN1TX	CAN1RX	EMIF_ ADDR[12]	NC	EMIF_ nDQM[0]	VCC		VCC	VSS	VSS	VSS	VCC		VCC	NC	NC	NC	MIBSPI3 NCS[0]	GIOB[3]	10
9	N2HET1 [27]	FRAY TXEN2	EMIF_ ADDR[11]	NC	EMIF_ ADDR[5]	VCC		VSS	VSS	VSS	VSS	VSS		VCCIO	EXTCLKI N2	NC	NC	MIBSPI3 CLK	MIBSPI3 NENA	9
8	FRAY RX2	FRAY TX2	EMIF_ ADDR[10]	NC	EMIF_ ADDR[4]	VCCP		VSS	VSS	VCC	VSS	VSS		VCCIO	EMIF_ DATA[15]	NC	NC	MIBSPI3 SOMI	MIBSPI3 SIMO	8
7	LINRX	LINTX	EMIF_ ADDR[9]	NC	EMIF_ ADDR[3]	VCCIO								VCCIO	EMIF_ DATA[14]	NC	NC	N2HET1 [9]	nPORRST	7
6	GIOA[4]	MIBSPI5 NCS[1]	EMIF_ ADDR[8]	NC	EMIF_ ADDR[2]	VCCIO	VCCIO	VCCIO	VCCIO	VCC	VCC	VCCIO	VCCIO	VCCIO	EMIF_ DATA[13]	NC	NC	N2HET1 [5]	MIBSPI5 NCS[2]	6
5	GIOA[0]	GIOA[5]	EMIF_ ADDR[7]	EMIF_ ADDR[1]	EMIF_ DATA[4]	EMIF_ DATA[5]	EMIF_ DATA[6]	FLTP2	FLTP1	EMIF_ DATA[7]	EMIF_ DATA[8]	EMIF_ DATA[9]	EMIF_ DATA[10]	EMIF_ DATA[11]	EMIF_ DATA[12]	NC	NC	MIBSPI3 NCS[1]	N2HET1 [2]	5
4	N2HET1 [16]	N2HET1 [12]	EMIF_ ADDR[6]	EMIF_ ADDR[0]	NC	NC	NC	N2HET1 [21]	N2HET1 [23]	NC	NC	NC	NC	NC	EMIF_ nCAS	NC	NC	NC	NC	4
3	N2HET1 [29]	N2HET1 [22]	MIBSPI3 NCS[3]	SPI2 NENA	N2HET1 [11]	MIBSPI1 NCS[1]	MIBSPI1 NCS[2]	GIOA[6]	MIBSPI1 NCS[3]	EMIF_ CLK	EMIF_ CKE	N2HET1 [25]	SPI2 NCS[0]	EMIF_ nWAIT	EMIF_ nRAS	NC	NC	NC	N2HET1 [6]	3
2	VSS	MIBSPI3 NCS[2]	GIOA[1]	SPI2 SOMI	SPI2 CLK	GIOB[2]	GIOB[5]	CAN2TX	GIOB[6]	GIOB[1]	KELVIN_ GND	GIOB[0]	N2HET1 [13]	N2HET1 [20]	MIBSPI1 NCS[0]	NC	TEST	N2HET1 [1]	VSS	2
1	VSS	VSS	GIOA[2]	SPI2 SIMO	GIOA[3]	GIOB[7]	GIOB[4]	CAN2RX	N2HET1 [18]	OSCIN	OSCOUT	GIOA[7]	N2HET1 [15]	N2HET1 [24]	NC	N2HET1 [7]	N2HET1 [3]	VSS	VSS	1
	A	B	C	D	E	F	G	H	J	K	L	M	N	P	R	T	U	V	W	

Figure 4-2. ZWT Package Pinout. Top View

Note: Balls can have multiplexed functions. Only the default function is depicted in above diagram.

Copyright © 2012–2015, Texas Instruments Incorporated

4.3 Terminal Functions

Section 4.3.1 and Section 4.3.2 identify the external signal names, the associated pin/ball numbers along with the mechanical package designator, the pin/ball type (Input, Output, IO, Power or Ground), whether the pin/ball has any internal pullup/pulldown, whether the pin/ball can be configured as a GPIO, and a functional pin/ball description. The first signal name listed is the primary function for that terminal. The signal name in **Bold** is the function being described. Refer to the I/O Multiplexing Module (IOMM) chapter of the TMS570LS12x/11x Technical Reference Manual (SPNU515).

NOTE

In the Terminal Functions table below, the "Reset Pull State" is the state of the pull applied to the terminal while nPORRST is low and immediately after nPORRST goes High. The default pull direction may change when software configures the pin for an alternate function. The "Pull Type" is the type of pull asserted when the signal name in bold is enabled for the given terminal by the IOMM control registers.

All I/O signals except nRST are configured as inputs while nPORRST is low and immediately after nPORRST goes High. While nPORRST is low, the input buffers are disabled, and the output buffers are disabled with the default pulls enabled.

All output-only signals have the output buffer disabled and the default pull enabled while nPORRST is low, and are configured as outputs with the pulls disabled immediately after nPORRST goes High.

4.3.1 PGE Package

4.3.1.1 Multibuffered Analog-to-Digital Converters (MibADC)

Table 4-1. PGE Multibuffered Analog-to-Digital Converters (MibADC1, MibADC2)

Terminal		Signal Type	Reset Pull State	Pull Type	Description
Signal Name	144 PGE				
ADREFHI(1)	66	Power	N/A	None	ADC high reference supply
ADREFLO(1)	67	Power			ADC low reference supply
VCCAD(1)	69	Power			Operating supply for ADC
VSSAD(1)	68	Ground			
AD1EVT	86	I/O	Pull Down	Programmable, 20 µA	ADC1 event trigger input, or GPIO
MIBSPI3NCS[0]/**AD2EVT**/GIOB[2]/ EQEP1I/N2HET2_PIN_nDIS	55	I/O	Pull Up	Programmable, 20 µA	ADC2 event trigger input, or GPIO
AD1IN[0]	60	Input	N/A	None	ADC1 analog input
AD1IN[1]	71				
AD1IN[2]	73				
AD1IN[3]	74				
AD1IN[4]	76				
AD1IN[5]	78				
AD1IN[6]	80				
AD1IN[7]	61				

(1) The ADREFHI, ADREFLO, VCCAD and VSSAD connections are common for both ADC cores.

Table 4-1. PGE Multibuffered Analog-to-Digital Converters (MibADC1, MibADC2) (continued)

Terminal		Signal Type	Reset Pull State	Pull Type	Description
Signal Name	144 PGE				
AD1IN[8] / AD2IN[8]	83	Input	N/A	None	ADC1/ADC2 shared analog inputs
AD1IN[9] / AD2IN[9]	70				
AD1IN[10] / AD2IN[10]	72				
AD1IN[11] / AD2IN[11]	75				
AD1IN[12] / AD2IN[12]	77				
AD1IN[13] / AD2IN[13]	79				
AD1IN[14] / AD2IN[14]	82				
AD1IN[15] / AD2IN[15]	85				
AD1IN[16] / AD2IN[0]	58				
AD1IN[17] / AD2IN[1]	59				
AD1IN[18] / AD2IN[2]	62				
AD1IN[19] / AD2IN[3]	63				
AD1IN[20] / AD2IN[4]	64				
AD1IN[21] / AD2IN[5]	65				
AD1IN[22] / AD2IN[6]	81				
AD1IN[23] / AD2IN[7]	84				
MIBSPI3SOMI[0]/**AWM1_EXT_ENA**/ECAP2	51	Output	Pull Up	None	AWM1 external analog mux enable
MIBSPI3SIMO[0]/**AWM1_EXT_SEL[0]**/ECAP3	52	Output	Pull Up	None	AWM1 external analog mux select line0
MIBSPI3CLK/**AWM1_EXT_SEL[1]**/EQEP1A	53	Output	Pull Up	None	AWM1 external analog mux select line0

Copyright © 2012–2015, Texas Instruments Incorporated

4.3.1.2 Enhanced High-End Timer Modules (N2HET)

Table 4-2. PGE Enhanced High-End Timer Modules (N2HET)

Terminal		Signal Type	Reset Pull State	Pull Type	Description
Signal Name	144 PGE				
N2HET1[0]/SPI4CLK/EPWM2B	25	I/O	Pull Down	Programmable, 20 µA	N2HET1 time input capture or output compare, or GIO. Each terminal has a suppression filter with a programmable duration.
N2HET1[1]/SPI4NENA/N2HET2[8]/EQEP2A	23				
N2HET1[2]/SPI4SIMO[0]/EPWM3A	30				
N2HET1[3]/SPI4NCS[0]/N2HET2[10]/EQEP2B	24				
N2HET1[4]/EPWM4B	36				
N2HET1[5]/SPI4SOMI[0]/N2HET2[12]/EPWM3B	31				
N2HET1[6]/SCIRX/EPWM5A	38				
N2HET1[7]/N2HET2[14]/EPWM7B	33				
N2HET1[8]/MIBSPI1SIMO[1]	106				
N2HET1[9]/N2HET2[16]/EPWM7A	35				
N2HET1[10]/nTZ3	118				
N2HET1[11]/MIBSPI3NCS[4]/N2HET2[18]/ EPWM1SYNCO	6				
N2HET1[12]	124				
N2HET1[13]/SCITX/EPWM5B	39				
N2HET1[14]	125				
N2HET1[15]/MIBSPI1NCS[4]/ECAP1	41				
N2HET1[16]/EPWM1SYNCI/EPWM1SYNCO	139				
MIBSPI1NCS[1]/**N2HET1[17]**/EQEP1S	130		Pull Up		
N2HET1[18]/EPWM6A	140		Pull Down		
MIBSPI1NCS[2]/**N2HET1[19]**	40		Pull Up		
N2HET1[20]/EPWM6B	141		Pull Down		
N2HET1[22]	15				
MIBSPI1NENA/**N2HET1[23]**/ECAP4	96		Pull Up		
N2HET1[24]/MIBSPI1NCS[5]	91		Pull Down		
MIBSPI3NCS[1]/**N2HET1[25]**/MDCLK	37		Pull Up		
N2HET1[26]	92		Pull Down		
MIBSPI3NCS[2]/I2C_SDA/**N2HET1[27]**/nTZ2	4		Pull Up		
N2HET1[28]	107		Pull Down		
MIBSPI3NCS[3]/I2C_SCL/**N2HET1[29]**/nTZ1	3		Pull Up		
N2HET1[30]/EQEP2S	127		Pull Down		
MIBSPI3NENA/MIBSPI3NCS[5]/**N2HET1[31]**/EQEP1B	54		Pull Up		

Table 4-2. PGE Enhanced High-End Timer Modules (N2HET) (continued)

Terminal		Signal Type	Reset Pull State	Pull Type	Description
Signal Name	144 PGE				
GIOA[5]/EXTCLKIN/EPWM1A/**N2HET1_PIN_nDIS**	14	I/O	Pull Down	Programmable, 20 µA (1)	Disable selected PWM outputs
GIOA[2]/**N2HET2[0]**/ EQEP2I	9	I/O	Pull Down	Programmable, 20 µA	N2HET2 time input capture or output compare, or GPIO Each terminal has a suppression filter with a programmable duration.
GIOA[6]/**N2HET2[4]**/EPWM1B	16				
GIOA[7]/**N2HET2[6]**/EPWM2A	22				
N2HET1[1]/SPI4NENA/**N2HET2[8]**/EQEP2A	23				
N2HET1[3]/SPI4NCS[0]/**N2HET2[10]**/EQEP2B	24				
N2HET1[5]/SPI4SOMI[0]/**N2HET2[12]**/EPWM3B	31				
N2HET1[7]/**N2HET2[14]**/EPWM7B	33				
N2HET1[9]/**N2HET2[16]**/EPWM7A	35				
N2HET1[11]/MIBSPI3NCS[4]/**N2HET2[18]**/ EPWM1SYNCO	6				
MIBSPI3NCS[0]/AD2EVT/GIOB[2]/ EQEP1I/**N2HET2_PIN_nDIS**	55	I/O	Pull Up	Programmable, 20 µA (1)	Disable selected PWM outputs

(1) The N2HETx_PIN_nDIS function is always available on this terminal. There is no mux control to select this function. The pull direction is controlled by the function which is selected by the output mux control for this terminal.

4.3.1.3 Enhanced Capture Modules (eCAP)

Table 4-3. PGE Enhanced Capture Modules (eCAP) (1)

Terminal		Signal Type	Reset Pull State	Pull Type	Description
Signal Name	144 PGE				
N2HET1[15]/MIBSPI1NCS[4]/**ECAP1**	41	I/O	Pull Down	Fixed 20 µA Pull Up	Enhanced Capture Module 1 I/O
MIBSPI3SOMI[0]/AWM1_EXT_ENA/**ECAP2**	51		Pull Up		Enhanced Capture Module 2 I/O
MIBSPI3SIMO[0]/AWM1_EXT_SEL[0]/**ECAP3**	52				Enhanced Capture Module 3 I/O
MIBSPI1NENA/N2HET1[23]/**ECAP4**	96				Enhanced Capture Module 4 I/O
MIBSPI5NENA/MIBSPI5SOMI[1]/ **ECAP5**	97				Enhanced Capture Module 5 I/O
MIBSPI1NCS[0]/MIBSPI1SOMI[1]/**ECAP6**	105				Enhanced Capture Module 6 I/O

(1) These signals, when used as inputs, are double-synchronized and then optionally filtered with a 6-cycle VCLK4-based counter.

Copyright © 2012–2015, Texas Instruments Incorporated

4.3.1.4 Enhanced Quadrature Encoder Pulse Modules (eQEP)

Table 4-4. PGE Enhanced Quadrature Encoder Pulse Modules (eQEP)(1)

Terminal		Signal Type	Reset Pull State	Pull Type	Description
Signal Name	144 PGE				
MIBSPI3CLK/AWM1_EXT_SEL[1]/**EQEP1A**	53	Input	Pull Up	Fixed 20 µA Pull Up	Enhanced QEP1 Input A
MIBSPI3NENA/MIBSPI3NCS[5]/N2HET1[31]/**EQEP1B**	54	Input			Enhanced QEP1 Input B
MIBSPI3NCS[0]/AD2EVT/GIOB[2]/ **EQEP1I**/N2HET2_PIN_nDIS	55	I/O			Enhanced QEP1 Index
MIBSPI1NCS[1]/N2HET1[17]/**EQEP1S**	130	I/O			Enhanced QEP1 Strobe
N2HET1[1]/SPI4NENA/N2HET2[8]/**EQEP2A**	23	Input	Pull Down		Enhanced QEP2 Input A
N2HET1[3]/SPI4NCS[0]/N2HET2[10]/**EQEP2B**	24	Input			Enhanced QEP2 Input B
GIOA[2]/N2HET2[0]/ **EQEP2I**	9	I/O			Enhanced QEP2 Index
N2HET1[30]/**EQEP2S**	127	I/O			Enhanced QEP2 Strobe

(1) These signals are double-synchronized and then optionally filtered with a 6-cycle VCLK4-based counter.

4.3.1.5 Enhanced Pulse-Width Modulator Modules (ePWM)

Table 4-5. PGE Enhanced Pulse-Width Modulator Modules (ePWM)

Terminal		Signal Type	Reset Pull State	Pull Type	Description
Signal Name	144 PGE				
GIOA[5]/EXTCLKIN/**EPWM1A**/N2HET1_PIN_nDIS	14	Output	Pull Down	None	Enhanced PWM1 Output A
GIOA[6]/N2HET2[4]/**EPWM1B**	16				Enhanced PWM1 Output B
N2HET1[11]/MIBSPI3NCS[4]/N2HET2[18]/**EPWM1SYNCO**	6				External ePWM Sync Pulse Output
N2HET1[16]/**EPWM1SYNCI**/EPWM1SYNCO	139	Input		Fixed 20 µA Pull Up	External ePWM Sync Pulse Input
GIOA[7]/N2HET2[6]/**EPWM2A**	22	Output		None	Enhanced PWM2 Output A
N2HET1[0]/SPI4CLK/**EPWM2B**	25				Enhanced PWM2 Output B
N2HET1[2]/SPI4SIMO[0]/**EPWM3A**	30				Enhanced PWM3 Output A
N2HET1[5]/SPI4SOMI[0]/N2HET2[12]/**EPWM3B**	31				Enhanced PWM3 Output B
MIBSPI5NCS[0]/**EPWM4A**	32		Pull Up		Enhanced PWM4 Output A
N2HET1[4]/**EPWM4B**	36		Pull Down		Enhanced PWM4 Output B
N2HET1[6]/SCIRX/**EPWM5A**	38				Enhanced PWM5 Output A
N2HET1[13]/SCITX/**EPWM5B**	39				Enhanced PWM5 Output B
N2HET1[18]/**EPWM6A**	140				Enhanced PWM6 Output A
N2HET1[20]/**EPWM6B**	141				Enhanced PWM6 Output B
N2HET1[9]/N2HET2[16]/**EPWM7A**	35				Enhanced PWM7 Output A
N2HET1[7]/N2HET2[14]/**EPWM7B**	33				Enhanced PWM7 Output B

Copyright © 2012–2015, Texas Instruments Incorporated

Table 4-5. PGE Enhanced Pulse-Width Modulator Modules (ePWM) (continued)

Terminal		Signal Type	Reset Pull State	Pull Type	Description
Signal Name	144 PGE				
MIBSPI3NCS[3]/I2C_SCL/N2HET1[29]/**nTZ1**	3	Input	Pull Up	Fixed 20 µA Pull Up	Trip Zone Inputs 1, 2 and 3. These signals are either connected asynchronously to the ePWMx trip zone inputs, or double-synchronized with VCLK4, or double-synchronized and then filtered with a 6-cycle VCLK4-based counter before connecting to the ePWMx trip zone inputs.
MIBSPI3NCS[2]/I2C_SDA/N2HET1[27]/**nTZ2**	4				
N2HET1[10]/**nTZ3**	118		Pull Down		

4.3.1.6 General-Purpose Input / Output (GPIO)

Table 4-6. PGE General-Purpose Input / Output (GPIO)

Terminal		Signal Type	Reset Pull State	Pull Type	Description
Signal Name	144 PGE				
GIOA[2]/N2HET2[0]/EQEP2I	9	I/O	Pull Down	Programmable, 20 µA	General-purpose I/O. All GPIO terminals are capable of generating interrupts to the CPU on rising / falling / both edges.
GIOA[5]/EXTCLKIN/EPWM1A/N2HET1_PIN_nDIS	14				
GIOA[6]/N2HET2[4]/EPWM1B	16				
GIOA[7]/N2HET2[6]/EPWM2A	22				
MIBSPI3NCS[0]/AD2EVT/**GIOB[2]**/ EQEP1I/N2HET2_PIN_nDIS	55 (1)		Pull Up		

(1) GIOB[2] cannot output a level on to pin 55. Only the input functionality is supported so that the application can generate an interrupt whenever the N2HET2_PIN_nDIS is asserted (driven low). Also, a pull up is enabled on the input. This is not programmable using the GIO module control registers.

4.3.1.7 FlexRay Interface Controller (FlexRay)

Table 4-7. FlexRay Interface Controller (FlexRay)

Terminal		Signal Type	Reset Pull State	Pull Type	Description
Signal Name	144 PGE				
FRAYRX1	126	Input	Pull Up	Fixed 100 µA Pull Up	FlexRay data receive (channel 1)
FRAYTX1	133	Output	N/A	None	FlexRay data transmit (channel 1)
FRAYTXEN1	142	Output			FlexRay transmit enable (channel 1)
FRAYRX2	2	Input	Pull Up	Fixed 100 µA Pull Up	FlexRay data receive (channel 2)
FRAYTX2	1	Output	N/A	None	FlexRay data transmit (channel 2)
FRAYTXEN2	5	Output			FlexRay transmit enable (channel 2)

Copyright © 2012–2015, Texas Instruments Incorporated

4.3.1.8 Controller Area Network Controllers (DCAN)

Table 4-8. PGE Controller Area Network Controllers (DCAN)

Terminal		Signal Type	Reset Pull State	Pull Type	Description
Signal Name	144 PGE				
CAN1RX	90	I/O	Pull Up	Programmable, 20 µA	CAN1 receive, or GPIO
CAN1TX	89				CAN1 transmit, or GPIO
CAN2RX	129				CAN2 receive, or GPIO
CAN2TX	128				CAN2 transmit, or GPIO
CAN3RX	12				CAN3 receive, or GPIO
CAN3TX	13				CAN3 transmit, or GPIO

4.3.1.9 Local Interconnect Network Interface Module (LIN)

Table 4-9. PGE Local Interconnect Network Interface Module (LIN)

Terminal		Signal Type	Reset Pull State	Pull Type	Description
Signal Name	144 PGE				
LINRX	131	I/O	Pull Up	Programmable, 20 µA	LIN receive, or GPIO
LINTX	132				LIN transmit, or GPIO

4.3.1.10 Standard Serial Communication Interface (SCI)

Table 4-10. PGE Standard Serial Communication Interface (SCI)

Terminal		Signal Type	Reset Pull State	Pull Type	Description
Signal Name	144 PGE				
N2HET1[6]/**SCIRX**/EPWM5A	38	I/O	Pull Down	Programmable, 20 µA	SCI receive, or GPIO
N2HET1[13]/**SCITX**/EPWM5B	39				SCI transmit, or GPIO

4.3.1.11 Inter-Integrated Circuit Interface Module (I2C)

Table 4-11. PGE Inter-Integrated Circuit Interface Module (I2C)

Terminal		Signal Type	Reset Pull State	Pull Type	Description
Signal Name	144 PGE				
MIBSPI3NCS[2]/**I2C_SDA**/N2HET1[27]/nTZ2	4	I/O	Pull Up	Programmable, 20 µA	I2C serial data, or GPIO
MIBSPI3NCS[3]/**I2C_SCL**/N2HET1[29]/nTZ1	3				I2C serial clock, or GPIO

Copyright © 2012–2015, Texas Instruments Incorporated

4.3.1.12 Standard Serial Peripheral Interface (SPI)

Table 4-12. PGE Standard Serial Peripheral Interface (SPI)

Terminal		Signal Type	Reset Pull State	Pull Type	Description
Signal Name	144 PGE				
N2HET1[0]/**SPI4CLK**/EPWM2B	25	I/O	Pull Down	Programmable, 20 µA	SPI4 clock, or GPIO
N2HET1[3]/**SPI4NCS[0]**/N2HET2[10]/EQEP2B	24				SPI4 chip select, or GPIO
N2HET1[1]/**SPI4NENA**/N2HET2[8]/EQEP2A	23				SPI4 enable, or GPIO
N2HET1[2]/**SPI4SIMO[0]**/EPWM3A	30				SPI4 slave-input master-output, or GPIO
N2HET1[5]/**SPI4SOMI[0]**/N2HET2[12]/EPWM3B	31				SPI4 slave-output master-input, or GPIO

4.3.1.13 Multibuffered Serial Peripheral Interface Modules (MibSPI)

Table 4-13. PGE Multibuffered Serial Peripheral Interface Modules (MibSPI)

Terminal		Signal Type	Reset Pull State	Pull Type	Description
Signal Name	144 PGE				
MIBSPI1CLK	95	I/O	Pull Up	Programmable, 20 µA	MibSPI1 clock, or GPIO
MIBSPI1NCS[0]/MIBSPI1SOMI[1]/ECAP6	105				MibSPI1 chip select, or GPIO
MIBSPI1NCS[1]/N2HET1[17]/EQEP1S	130				
MIBSPI1NCS[2]/N2HET1[19]	40				
N2HET1[15]/**MIBSPI1NCS[4]**/ECAP1	41		Pull Down	Programmable, 20 µA	MibSPI1 chip select, or GPIO
N2HET1[24]/**MIBSPI1NCS[5]**	91				
MIBSPI1NENA/N2HET1[23]/ECAP4	96		Pull Up	Programmable, 20 µA	MibSPI1 enable, or GPIO
MIBSPI1SIMO[0]	93				MibSPI1 slave-in master-out, or GPIO
N2HET1[8]/**MIBSPI1SIMO[1]**	106		Pull Down	Programmable, 20 µA	MibSPI1 slave-in master-out, or GPIO
MIBSPI1SOMI[0]	94		Pull Up	Programmable, 20 µA	MibSPI1 slave-out master-in, or GPIO
MIBSPI1NCS[0]/**MIBSPI1SOMI[1]**/ECAP6	105				
MIBSPI3CLK/AWM1_EXT_SEL[1]/EQEP1A	53	I/O	Pull Up	Programmable, 20 µA	MibSPI3 clock, or GPIO
MIBSPI3NCS[0]/AD2EVT/GIOB[2]/ EQEP1I/N2HET2_PIN_nDIS	55				MibSPI3 chip select, or GPIO
MIBSPI3NCS[1]/N2HET1[25]/MDCLK	37				
MIBSPI3NCS[2]/I2C_SDA/N2HET1[27]/nTZ2	4				
MIBSPI3NCS[3]/I2C_SCL/N2HET1[29]/nTZ1	3				
N2HET1[11]/**MIBSPI3NCS[4]**/N2HET2[18]/EPWM1SYNCO	6		Pull Down	Programmable, 20 µA	MibSPI3 chip select, or GPIO
MIBSPI3NENA /**MIBSPI3NCS[5]**/N2HET1[31]/EQEP1B	54		Pull Up	Programmable, 20 µA	MibSPI3 chip select, or GPIO
MIBSPI3NENA/MIBSPI3NCS[5]/N2HET1[31]/EQEP1B	54				MibSPI3 enable, or GPIO
MIBSPI3SIMO[0]/AWM1_EXT_SEL[0]/ECAP3	52				MibSPI3 slave-in master-out, or GPIO
MIBSPI3SOMI[0]/AWM1_EXT_ENA/ECAP2	51				MibSPI3 slave-out master-in, or GPIO

Copyright © 2012–2015, Texas Instruments Incorporated

Table 4-13. PGE Multibuffered Serial Peripheral Interface Modules (MibSPI) (continued)

Terminal		Signal Type	Reset Pull State	Pull Type	Description
Signal Name	144 PGE				
MIBSPI5CLK	100	I/O	Pull Up	Programmable, 20 µA	MibSPI5 clock, or GPIO
MIBSPI5NCS[0]/EPWM4A	32				MibSPI5 chip select, or GPIO
MIBSPI5NENA/MIBSPI5SOMI[1]/ ECAP5	97				MibSPI5 enable, or GPIO
MIBSPI5SIMO[0]/MIBSPI5SOMI[2]	99				MibSPI5 slave-in master-out, or GPIO
MIBSPI5SOMI[0]	98				MibSPI5 slave-out master-in, or GPIO
MIBSPI5NENA/**MIBSPI5SOMI[1]**/ ECAP5	97				MibSPI5 slave-out master-in, or GPIO
MIBSPI5SIMO[0]/**MIBSPI5SOMI[2]**	99				MibSPI5 slave-out master-in, or GPIO

4.3.1.14 System Module Interface

Table 4-14. PGE System Module Interface

Terminal		Signal Type	Reset Pull State	Pull Type	Description
Signal Name	144 PGE				
nPORRST	46	Input	Pull Down	Fixed 100 µA Pull Down	Power-on reset, cold reset External power supply monitor circuitry must drive nPORRST low when any of the supplies to the microcontroller fall out of the specified range. This terminal has a glitch filter. See Section 6.8.
nRST	116	I/O	Pull Up	Fixed 100 µA Pull Up	System reset, warm reset, bidirectional. The internal circuitry indicates any reset condition by driving nRST low. The external circuitry can assert a system reset by driving nRST low. To ensure that an external reset is not arbitrarily generated, TI recommends that an external pull-up resistor is connected to this terminal. This terminal has a glitch filter. See Section 6.8.
nERROR	117	I/O	Pull Down	Fixed 20 µA Pull Down	ESM Error Signal Indicates error of high severity. See Section 6.18.

4.3.1.15 Clock Inputs and Outputs

Table 4-15. PGE Clock Inputs and Outputs

Terminal		Signal Type	Reset Pull State	Pull Type	Description
Signal Name	144 PGE				
OSCIN	18	Input	N/A	None	From external crystal/resonator, or external clock input
KELVIN_GND	19	Input			Kelvin ground for oscillator
OSCOUT	20	Output			To external crystal/resonator
ECLK	119	I/O	Pull Down	Programmable, 20 µA	External prescaled clock output, or GPIO.
GIOA[5]/**EXTCLKIN**/EPWM1A /N2HET1_PIN_nDIS	14	Input	Pull Down	Fixed 20 µA Pull Down	External clock input #1

Copyright © 2012–2015, Texas Instruments Incorporated

4.3.1.16 Test and Debug Modules Interface

Table 4-16. PGE Test and Debug Modules Interface

Terminal		Signal Type	Reset Pull State	Pull Type	Description
Signal Name	144 PGE				
TEST	34	Input	Pull Down	Fixed 100 µA Pull Down	Test enable. This terminal must be connected to ground directly or via a pull-down resistor.
nTRST	109	Input			JTAG test hardware reset
RTCK	113	Output	N/A	None	JTAG return test clock
TCK	112	Input	Pull Down	Fixed 100 µA Pull Down	JTAG test clock
TDI	110	Input	Pull Up	Fixed 100 µA Pull Up	JTAG test data in
TDO	111	Output	100 µA Pull Down	None	JTAG test data out
TMS	108	Input	Pull Up	Fixed 100 µA Pull Up	JTAG test select

4.3.1.17 Flash Supply and Test Pads

Table 4-17. PGE Flash Supply and Test Pads

Terminal		Signal Type	Reset Pull State	Pull Type	Description
Signal Name	144 PGE				
VCCP	134	3.3V Power	N/A	None	Flash pump supply
FLTP1	7	-	N/A-	None	Flash test pads. These terminals are reserved for TI use only. For proper operation these terminals must connect only to a test pad or not be connected at all [no connect (NC)].
FLTP2	8				

4.3.1.18 Supply for Core Logic: 1.2V nominal

Table 4-18. PGE Supply for Core Logic: 1.2V nominal

Terminal		Signal Type	Reset Pull State	Pull Type	Description
Signal Name	144 PGE				
VCC	17	1.2V Power	N/A	None	Core supply
VCC	29				
VCC	45				
VCC	48				
VCC	49				
VCC	57				
VCC	87				
VCC	101				
VCC	114				
VCC	123				
VCC	137				
VCC	143				

4.3.1.19 Supply for I/O Cells: 3.3V nominal

Table 4-19. PGE Supply for I/O Cells: 3.3V nominal

Terminal		Signal Type	Reset Pull State	Pull Type	Description
Signal Name	144 PGE				
VCCIO	10	3.3V Power	N/A	None	Operating supply for I/Os
VCCIO	26				
VCCIO	42				
VCCIO	104				
VCCIO	120				
VCCIO	136				

Copyright © 2012–2015, Texas Instruments Incorporated

4.3.1.20 Ground Reference for All Supplies Except VCCAD

Table 4-20. PGE Ground Reference for All Supplies Except VCCAD

Terminal		Signal Type	Reset Pull State	Pull Type	Description
Signal Name	144 PGE				
VSS	11	Ground	N/A	None	Ground reference
VSS	21				
VSS	27				
VSS	28				
VSS	43				
VSS	44				
VSS	47				
VSS	50				
VSS	56				
VSS	88				
VSS	102				
VSS	103				
VSS	115				
VSS	121				
VSS	122				
VSS	135				
VSS	138				
VSS	144				

Copyright © 2012–2015, Texas Instruments Incorporated

4.3.2 ZWT Package

4.3.2.1 Multibuffered Analog-to-Digital Converters (MibADC)

Table 4-21. ZWT Multibuffered Analog-to-Digital Converters (MibADC1, MibADC2)

Terminal		Signal Type	Reset Pull State	Pull Type	Description
Signal Name	337 ZWT				
ADREFHI(1)	V15	Power	N/A	None	ADC high reference supply
ADREFLO(1)	V16	Power			ADC low reference supply
VCCAD(1)	W15	Power			Operating supply for ADC
VSSAD	V19	Ground	N/A	None	ADC supply power
VSSAD	W16				
VSSAD	W18				
VSSAD	W19				
AD1EVT	N19	I/O	Pull Down	Programmable, 20 µA	ADC1 event trigger input, or GPIO
MIBSPI3NCS[0]/**AD2EVT**/GIOB[2]/ EQEP1I/N2HET2_PIN_nDIS	V10	I/O	Pull Up	Programmable, 20 µA	ADC2 event trigger input, or GPIO
AD1IN[0]	W14	Input	N/A	None	ADC1 analog input
AD1IN[1]	V17				
AD1IN[2]	V18				
AD1IN[3]	T17				
AD1IN[4]	U18				
AD1IN[5]	R17				
AD1IN[6]	T19				
AD1IN[7]	V14				
AD1IN[8] / AD2IN[8]	P18	Input	N/A	None	ADC1/ADC2 shared analog inputs
AD1IN[9] / AD2IN[9]	W17				
AD1IN[10] / AD2IN[10]	U17				
AD1IN[11] / AD2IN[11]	U19				
AD1IN[12] / AD2IN[12]	T16				
AD1IN[13] / AD2IN[13]	T18				
AD1IN[14] / AD2IN[14]	R18				
AD1IN[15] / AD2IN[15]	P19				
AD1IN[16] / AD2IN[0]	V13				
AD1IN[17] / AD2IN[1]	U13				
AD1IN[18] / AD2IN[2]	U14				
AD1IN[19] / AD2IN[3]	U16				
AD1IN[20] / AD2IN[4]	U15				
AD1IN[21] / AD2IN[5]	T15				
AD1IN[22] / AD2IN[6]	R19				
AD1IN[23] / AD2IN[7]	R16				
MIBSPI3SOMI[0]/**AWM1_EXT_ENA**/ECAP2	V8	Output	Pull Up	None	AWM1 external analog mux enable
MIBSPI3SIMO[0]/**AWM1_EXT_SEL[0]**/ECAP3	W8				AWM1 external analog mux select line0
MIBSPI3CLK/**AWM1_EXT_SEL[1]**/EQEP1A	V9				AWM1 external analog mux select line0

(1) The ADREFHI, ADREFLO, VCCAD and VSSAD connections are common for both ADC cores.

Copyright © 2012–2015, Texas Instruments Incorporated

4.3.2.2 Enhanced High-End Timer Modules (N2HET)

Table 4-22. ZWT Enhanced High-End Timer Modules (N2HET)

Terminal		Signal Type	Reset Pull State	Pull Type	Description
Signal Name	337 ZWT				
N2HET1[0]/SPI4CLK/EPWM2B	K18	I/O	Pull Down	Programmable, 20 µA	N2HET1 time input capture or output compare, or GIO. Each terminal has a suppression filter with a programmable duration.
N2HET1[1]/SPI4NENA/N2HET2[8]/EQEP2A	V2				
N2HET1[2]/SPI4SIMO[0]/EPWM3A	W5				
N2HET1[3]/SPI4NCS[0]/N2HET2[10]/EQEP2B	U1				
N2HET1[4]/EPWM4B	B12				
N2HET1[5]/SPI4SOMI[0]/N2HET2[12]/EPWM3B	V6				
N2HET1[6]/SCIRX/EPWM5A	W3				
N2HET1[7]/N2HET2[14]/EPWM7B	T1				
N2HET1[8]/MIBSPI1SIMO[1]	E18				
N2HET1[9]/N2HET2[16]/EPWM7A	V7				
N2HET1[10]/nTZ3	D19				
N2HET1[11]/MIBSPI3NCS[4]/N2HET2[18]/EPWM1SYNCO	E3				
N2HET1[12]	B4				
N2HET1[13]/SCITX/EPWM5B	N2				
N2HET1[14]	A11				
N2HET1[15]/MIBSPI1NCS[4]/ECAP1	N1				
N2HET1[16]/EPWM1SYNCI/EPWM1SYNCO	A4				
N2HET1[17]	A13				
MIBSPI1NCS[1]/**N2HET1[17]**/ EQEP1S	F3				
N2HET1[18]/EPWM6A	J1				
N2HET1[19]	B13				
MIBSPI1NCS[2]/**N2HET1[19]**	G3				
N2HET1[20]/EPWM6B	P2				
N2HET1[21]	H4				
MIBSPI1NCS[3]/**N2HET1[21]**	J3				
N2HET1[22]	B3				
N2HET1[23]	J4				
MIBSPI1NENA/**N2HET1[23]**/ECAP4	G19		Pull Up		
N2HET1[24]/MIBSPI1NCS[5]	P1		Pull Down		
N2HET1[25]	M3				
MIBSPI3NCS[1]/**N2HET1[25]**/MDCLK	V5				
N2HET1[26]	A14				
N2HET1[27]	A9				
MIBSPI3NCS[2]/I2C_SDA/**N2HET1[27]**/nTZ2	B2		Pull Up		
N2HET1[28]	K19		Pull Down		
N2HET1[29]	A3				
MIBSPI3NCS[3]/I2C_SCL/**N2HET1[29]**/nTZ1	C3				

Table 4-22. ZWT Enhanced High-End Timer Modules (N2HET) (continued)

Terminal		Signal Type	Reset Pull State	Pull Type	Description
Signal Name	337 ZWT				
N2HET1[30]/EQEP2S	B11	I/O	Pull Down	Programmable, 20 µA	
N2HET1[31]	J17				
MIBSPI3NENA/MIBSPI3NCS[5]/**N2HET1[31]**/EQEP1B	W9		Pull Up		
GIOA[5]/EXTCLKIN/EPWM1A/**N2HET1_PIN_nDIS**	B5	input	Pull Down	Programmable, 20 µA (1)	Disable selected PWM outputs
GIOA[2]/**N2HET2[0]** /EQEP2I	C1	I/O	Pull Down	Programmable, 20 µA	N2HET2 time input capture or output compare, or GIO. Each terminal has a suppression filter with a programmable duration.
EMIF_ADDR[0]/**N2HET2[1]**	D4				
GIOA[3]/**N2HET2[2]**	E1				
EMIF_ADDR[1]/**N2HET2[3]**	D5				
GIOA[6]/**N2HET2[4]**/EPWM1B	H3				
EMIF_BA[1]/**N2HET2[5]**	D16				
GIOA[7]/**N2HET2[6]**/EPWM2A	M1				
EMIF_nCS[0]/**N2HET2[7]**	N17				
N2HET1[1]/SPI4NENA/ **N2HET2[8]**/EQEP2A	V2				
EMIF_nCS[3]/**N2HET2[9]**	K17				
N2HET1[3]/SPI4NCS[0]/**N2HET2[10]**/EQEP2B	U1				
EMIF_ADDR[6]/**N2HET2[11]**	C4				
N2HET1[5]/SPI4SOMI[0]/**N2HET2[12]**/EPWM3B	V6				
EMIF_ADDR[7]/**N2HET2[13]**	C5				
N2HET1[7]/**N2HET2[14]**/EPWM7B	T1				
EMIF_ADDR[8]/**N2HET2[15]**	C6				
N2HET1[9]/**N2HET2[16]**/EPWM7A	V7				
N2HET1[11]/MIBSPI3NCS[4]/**N2HET2[18]**/EPWM1SYNCO	E3				
MIBSPI3NCS[0]/AD2EVT/GIOB[2]/ EQEP1I/**N2HET2_PIN_nDIS**	V10	I/O	Pull Up	Programmable, 20 µA (1)	Disable selected PWM outputs

(1) The N2HETx_PIN_nDIS function is always available on this terminal. There is no mux control to select this function. The pull direction is controlled by the function which is selected by the output mux control for this terminal.

Copyright © 2012–2015, Texas Instruments Incorporated

4.3.2.3 Enhanced Capture Modules (eCAP)

Table 4-23. ZWT Enhanced Capture Modules (eCAP)(1)

Terminal		Signal Type	Reset Pull State	Pull Type	Description
Signal Name	337 ZWT				
N2HET1[15]/MIBSPI1NCS[4]/**ECAP1**	N1	I/O	Pull Down	Fixed 20 µA Pull Up	Enhanced Capture Module 1 I/O
MIBSPI3SOMI[0]/AWM1_EXT_ENA/**ECAP2**	V8	I/O	Pull Up		Enhanced Capture Module 2 I/O
MIBSPI3SIMO[0]/AWM1_EXT_SEL[0]/**ECAP3**	W8	I/O			Enhanced Capture Module 3 I/O
MIBSPI1NENA/N2HET1[23]/**ECAP4**	G19	I/O			Enhanced Capture Module 4 I/O
MIBSPI5NENA/MIBSPI5SOMI[1]/ **ECAP5**	H18	I/O			Enhanced Capture Module 5 I/O
MIBSPI1NCS[0]/MIBSPI1SOMI[1]/ **ECAP6**	R2	I/O			Enhanced Capture Module 6 I/O

(1) These signals, when used as inputs, are double-synchronized and then optionally filtered with a 6-cycle VCLK4-based counter.

4.3.2.4 Enhanced Quadrature Encoder Pulse Modules (eQEP)

Table 4-24. ZWT Enhanced Quadrature Encoder Pulse Modules (eQEP)(1)

Terminal		Signal Type	Reset Pull State	Pull Type	Description
Signal Name	337 ZWT				
MIBSPI3CLK/AWM1_EXT_SEL[1]/**EQEP1A**	V9	Input	Pull Up	Fixed 20 µA Pull Up	Enhanced QEP1 Input A
MIBSPI3NENA/MIBSPI3NCS[5]/N2HET1[31]/**EQEP1B**	W9	Input			Enhanced QEP1 Input B
MIBSPI3NCS[0]/AD2EVT/GIOB[2]/ **EQEP1I**/N2HET2_PIN_nDIS	V10	I/O			Enhanced QEP1 Index
MIBSPI1NCS[1]/N2HET1[17]/ **EQEP1S**	F3	I/O			Enhanced QEP1 Strobe
N2HET1[1]/SPI4NENA/N2HET2[8]/**EQEP2A**	V2	Input	Pull Down		Enhanced QEP2 Input A
N2HET1[3]/SPI4NCS[0]/N2HET2[10]/**EQEP2B**	U1	Input	Pull Down		Enhanced QEP2 Input B
GIOA[2]/N2HET2[0]/ **EQEP2I**	C1	I/O	Pull Down		Enhanced QEP2 Index
N2HET1[30]/**EQEP2S**	B11	I/O	Pull Down		Enhanced QEP2 Strobe

(1) These signals are double-synchronized and then optionally filtered with a 6-cycle VCLK4-based counter.

Copyright © 2012–2015, Texas Instruments Incorporated

4.3.2.5 Enhanced Pulse-Width Modulator Modules (ePWM)

Table 4-25. ZWT Enhanced Pulse-Width Modulator Modules (ePWM)

TERMINAL		SIGNAL TYPE	Reset Pull State	PULL TYPE	DESCRIPTION
SIGNAL NAME	337 ZWT				
GIOA[5]/EXTCLKIN/**EPWM1A**/N2HET1_PIN_nDIS	B5	Output	Pull Down	None	Enhanced PWM1 Output A
GIOA[6]/N2HET2[4]/**EPWM1B**	H3				Enhanced PWM1 Output B
N2HET1[11]/MIBSPI3NCS[4]/N2HET2[18]/**EPWM1SYNCO**	E3				External ePWM Sync Pulse Output
N2HET1[16]/**EPWM1SYNCI**/EPWM1SYNCO	A4	Input		Fixed 20 µA Pull Up	External ePWM Sync Pulse Input
GIOA[7]/N2HET2[6]/**EPWM2A**	M1	Output		None	Enhanced PWM2 Output A
N2HET1[0]/SPI4CLK/**EPWM2B**	K18				Enhanced PWM2 Output B
N2HET1[2]/SPI4SIMO[0]/**EPWM3A**	W5				Enhanced PWM3 Output A
N2HET1[5]/SPI4SOMI[0]/N2HET2[12]/**EPWM3B**	V6				Enhanced PWM3 Output B
MIBSPI5NCS[0]/**EPWM4A**	E19		Pull Up		Enhanced PWM4 Output A
N2HET1[4]/**EPWM4B**	B12		Pull Down		Enhanced PWM4 Output B
N2HET1[6]/SCIRX/**EPWM5A**	W3				Enhanced PWM5 Output A
N2HET1[13]/SCITX/**EPWM5B**	N2				Enhanced PWM5 Output B
N2HET1[18]/**EPWM6A**	J1				Enhanced PWM6 Output A
N2HET1[20]/**EPWM6B**	P2				Enhanced PWM6 Output B
N2HET1[9]/N2HET2[16]/**EPWM7A**	V7				Enhanced PWM7 Output A
N2HET1[7]/N2HET2[14]/**EPWM7B**	T1				Enhanced PWM7 Output B
MIBSPI3NCS[3]/I2C_SCL/N2HET1[29]/**nTZ1**	C3	Input	Pull Up	Fixed 20 µA Pull Up	Trip Zone Inputs 1, 2 and 3. These signals are either connected asynchronously to the ePWMx trip zone inputs, or double-synchronized with VCLK4, or double-synchronized and then filtered with a 6-cycle VCLK4-based counter before connecting to the ePWMx trip zone inputs.
MIBSPI3NCS[2]/I2C_SDA/N2HET1[27]/**nTZ2**	B2				
N2HET1[10]/**nTZ3**	D19		Pull Down		

Copyright © 2012–2015, Texas Instruments Incorporated

4.3.2.6 General-Purpose Input / Output (GPIO)

Table 4-26. ZWT General-Purpose Input / Output (GPIO)

Terminal		Signal Type	Reset Pull State	Pull Type	Description
Signal Name	337 ZWT				
GIOA[0]	A5	I/O	Pull Down	Programmable, 20 µA	General-purpose I/O. All GPIO terminals are capable of generating interrupts to the CPU on rising / falling / both edges.
GIOA[1]	C2				
GIOA[2]/N2HET2[0] /EQEP2I	C1				
GIOA[3]/N2HET2[2]	E1				
GIOA[4]	A6				
GIOA[5]/EXTCLKIN/EPWM1A/N2HET1_PIN_nDIS	B5				
GIOA[6]/N2HET2[4]/EPWM1B	H3				
GIOA[7]/N2HET2[6]/EPWM2A	M1				
GIOB[0]	M2				
GIOB[1]	K2				
GIOB[2]	F2				
MIBSPI3NCS[0]/AD2EVT/**GIOB[2]**/ EQEP1I/N2HET2_PIN_nDIS	V10 (1)				
GIOB[3]	W10				
GIOB[4]	G1				
GIOB[5]	G2				
GIOB[6]	J2				
GIOB[7]	F1				

(1) GIOB[2] cannot output a level on to terminal V10. Only the input functionality is supported so that the application can generate an interrupt whenever the N2HET2_PIN_nDIS is asserted (driven low). Also, a pull up is enabled on the input. This is not programmable using the GIO module control registers.

4.3.2.7 FlexRay Interface Controller (FlexRay)

Table 4-27. FlexRay Interface Controller (FlexRay)

Terminal		Signal Type	Reset Pull State	Pull Type	Description
Signal Name	337 ZWT				
FRAYRX1	A15	Input	Pull Up	Fixed 100 µA Pull Up	FlexRay data receive (channel 1)
FRAYTX1	B15	Output	N/A	None	FlexRay data transmit (channel 1)
FRAYTXEN1	B16	Output			FlexRay transmit enable (channel 1)
FRAYRX2	A8	Input	Pull Up	Fixed 100 µA Pull Up	FlexRay data receive (channel 2)
FRAYTX2	B8	Output	N/A	None	FlexRay data transmit (channel 2)
FRAYTXEN2	B9	Output			FlexRay transmit enable (channel 2)

4.3.2.8 Controller Area Network Controllers (DCAN)

Table 4-28. ZWT Controller Area Network Controllers (DCAN)

Terminal		Signal Type	Reset Pull State	Pull Type	Description
Signal Name	337 ZWT				
CAN1RX	B10	I/O	Pull Up	Programmable, 20 µA	CAN1 receive, or GPIO
CAN1TX	A10				CAN1 transmit, or GPIO
CAN2RX	H1				CAN2 receive, or GPIO
CAN2TX	H2				CAN2 transmit, or GPIO
CAN3RX	M19				CAN3 receive, or GPIO
CAN3TX	M18				CAN3 transmit, or GPIO

4.3.2.9 Local Interconnect Network Interface Module (LIN)

Table 4-29. ZWT Local Interconnect Network Interface Module (LIN)

Terminal		Signal Type	Reset Pull State	Pull Type	Description
Signal Name	337 ZWT				
LINRX	A7	I/O	Pull Up	Programmable, 20 µA	LIN receive, or GPIO
LINTX	B7				LIN transmit, or GPIO

4.3.2.10 Standard Serial Communication Interface (SCI)

Table 4-30. ZWT Standard Serial Communication Interface (SCI)

Terminal		Signal Type	Reset Pull State	Pull Type	Description
Signal Name	337 ZWT				
N2HET1[6]/**SCIRX**/EPWM5A	W3	I/O	Pull Down	Programmable, 20 µA	SCI receive, or GPIO
N2HET1[13]/**SCITX**/EPWM5B	N2				SCI transmit, or GPIO

Copyright © 2012–2015, Texas Instruments Incorporated

4.3.2.11 Inter-Integrated Circuit Interface Module (I2C)

Table 4-31. ZWT Inter-Integrated Circuit Interface Module (I2C)

Terminal		Signal Type	Reset Pull State	Pull Type	Description
Signal Name	337 ZWT				
MIBSPI3NCS[2]/**I2C_SDA**/N2HET1[27]/nTZ2	B2	I/O	Pull Up	Programmable, 20 µA	I2C serial data, or GPIO
MIBSPI3NCS[3]/**I2C_SCL**/N2HET1[29]/nTZ1	C3				I2C serial clock, or GPIO

4.3.2.12 Standard Serial Peripheral Interface (SPI)

Table 4-32. ZWT Standard Serial Peripheral Interface (SPI)

Terminal		Signal Type	Reset Pull State	Pull Type	Description
Signal Name	337 ZWT				
SPI2CLK	E2	I/O	Pull Up	Programmable, 20 µA	SPI2 clock, or GPIO
SPI2NCS[0]	N3				SPI2 chip select, or GPIO
SPI2NENA/**SPI2NCS[1]**	D3				SPI2 chip select, or GPIO
SPI2NENA/SPI2NCS[1]	D3				SPI2 enable, or GPIO
SPI2SIMO[0]	D1				SPI2 slave-input master-output, or GPIO
SPI2SOMI[0]	D2				SPI2 slave-output master-input, or GPIO
N2HET1[0]/**SPI4CLK**/EPWM2B	K18	I/O	Pull Down	Programmable, 20 µA	SPI4 clock, or GPIO
N2HET1[3]/**SPI4NCS[0]**/N2HET2[10]/EQEP2B	U1				SPI4 chip select, or GPIO
N2HET1[1]/**SPI4NENA**/N2HET2[8]/EQEP2A	V2				SPI4 enable, or GPIO
N2HET1[2]/**SPI4SIMO[0]**/EPWM3A	W5				SPI4 slave-input master-output, or GPIO
N2HET1[5]/**SPI4SOMI[0]**/N2HET2[12]/EPWM3B	V6				SPI4 slave-output master-input, or GPIO

4.3.2.13 Multibuffered Serial Peripheral Interface Modules (MibSPI)

Table 4-33. ZWT Multibuffered Serial Peripheral Interface Modules (MibSPI)

Terminal		Signal Type	Reset Pull State	Pull Type	Description
Signal Name	337 ZWT				
MIBSPI1CLK	F18	I/O	Pull Up	Programmable, 20 µA	MibSPI1 clock, or GPIO
MIBSPI1NCS[0]/MIBSPI1SOMI[1]/ECAP6	R2				MibSPI1 chip select, or GPIO
MIBSPI1NCS[1]/N2HET1[17]/EQEP1S	F3				
MIBSPI1NCS[2]/N2HET1[19]	G3				
MIBSPI1NCS[3]/N2HET1[21]	J3				
N2HET1[15]/**MIBSPI1NCS[4]**/ECAP1	N1		Pull Down	Programmable, 20 µA	MibSPI1 chip select, or GPIO
N2HET1[24]/**MIBSPI1NCS[5]**	P1				
MIBSPI1NENA/N2HET1[23]/ECAP4	G19		Pull Up	Programmable, 20 µA	MibSPI1 enable, or GPIO
MIBSPI1SIMO[0]	F19				MibSPI1 slave-in master-out, or GPIO
N2HET1[8]/**MIBSPI1SIMO[1]**	E18		Pull Down	Programmable, 20 µA	MibSPI1 slave-in master-out, or GPIO
MIBSPI1SOMI[0]	G18		Pull Up	Programmable, 20 µA	MibSPI1 slave-out master-in, or GPIO
MIBSPI1NCS[0]/**MIBSPI1SOMI[1]**/ECAP6	R2				
MIBSPI3CLK/AWM1_EXT_SEL[1]/EQEP1A	V9	I/O	Pull Up	Programmable, 20 µA	MibSPI3 clock, or GPIO
MIBSPI3NCS[0]/AD2EVT/GIOB[2]/ EQEP1I/N2HET2_PIN_nDIS	V10				MibSPI3 chip select, or GPIO
MIBSPI3NCS[1]/N2HET1[25]/MDCLK	V5				
MIBSPI3NCS[2]/I2C_SDA/N2HET1[27]/nTZ2	B2				
MIBSPI3NCS[3]/I2C_SCL/N2HET1[29]/nTZ1	C3				
N2HET1[11]/**MIBSPI3NCS[4]**/N2HET2[18]/EPWM1SYNCO	E3		Pull Down	Programmable, 20 µA	MibSPI3 chip select, or GPIO
MIBSPI3NENA/**MIBSPI3NCS[5]**/N2HET1[31]/EQEP1B	W9		Pull Up	Programmable, 20 µA	MibSPI3 chip select, or GPIO
MIBSPI3NENA/MIBSPI3NCS[5]/N2HET1[31]/EQEP1B	W9				MibSPI3 enable, or GPIO
MIBSPI3SIMO[0]/AWM1_EXT_SEL[0]/ECAP3	W8				MibSPI3 slave-in master-out, or GPIO
MIBSPI3SOMI[0]/AWM1_EXT_ENA/ECAP2	V8				MibSPI3 slave-out master-in, or GPIO
MIBSPI5CLK	H19	I/O	Pull Up	Programmable, 20 µA	MibSPI5 clock, or GPIO
MIBSPI5NCS[0]/EPWM4A	E19				MibSPI5 chip select, or GPIO
MIBSPI5NCS[1]	B6				
MIBSPI5NCS[2]	W6				
MIBSPI5NCS[3]	T12				
MIBSPI5NENA/MIBSPI5SOMI[1]/ECAP5	H18				MibSPI5 enable, or GPIO
MIBSPI5SIMO[0]/MIBSPI5SOMI[2]	J19				MibSPI5 slave-in master-out, or GPIO
MIBSPI5SIMO[1]	E16				
MIBSPI5SIMO[2]	H17				
MIBSPI5SIMO[3]	G17				
MIBSPI5SOMI[0]	J18				MibSPI5 slave-out master-in, or GPIO
MIBSPI5SOMI[1]	E17				
MIBSPI5NENA/**MIBSPI5SOMI[1]**/ECAP5	H18				
MIBSPI5SOMI[2]	H16				
MIBSPI5SIMO[0]/**MIBSPI5SOMI[2]**	J19				
MIBSPI5SOMI[3]	G16				

Copyright © 2012–2015, Texas Instruments Incorporated

4.3.2.14 External Memory Interface (EMIF)

Table 4-34. External Memory Interface (EMIF)

Terminal		Signal Type	Reset Pull State	Pull Type	Description
Signal Name	337 ZWT				
EMIF_CKE	L3	Output	Pull Up	None	EMIF Clock Enable
EMIF_CLK	K3	I/O		None	EMIF clock. This is an output signal in functional mode. It is gated off by default, so that the signal is pulled up. PINMUX29[8] must be cleared to enable this output.
EMIF_nOE	E12	Output	Pull Up	None	EMIF Read Enable
EMIF_nWAIT	P3	I/O	Pull Up	Fixed 20 µA Pull Up	EMIF Extended Wait Signal
EMIF_nWE	D17	Output	Pull Up	None	EMIF Write Enable
EMIF_nCAS	R4	Output			EMIF column address strobe
EMIF_nRAS	R3	Output			EMIF row address strobe
EMIF_nCS[0]/N2HET2[7] (1)	N17	Output			EMIF chip select, synchronous
EMIF_nCS[2]	L17	Output			EMIF chip selects, asynchronous This applies to chip selects 2, 3 and 4
EMIF_nCS[3]/N2HET2[9] (1)	K17	Output			
EMIF_nCS[4]	M17	Output			
EMIF_nDQM[0]	E10	Output			EMIF Data Mask or Write Strobe. Data mask for SDRAM devices, write strobe for connected asynchronous devices.
EMIF_nDQM[1]	E11	Output			
EMIF_BA[0]	E13	Output			EMIF bank address or address line
EMIF_BA[1]/N2HET2[5] (1)	D16	Output			EMIF bank address or address line
EMIF_ADDR[0]/N2HET2[1] (1)	D4	Output			EMIF address
EMIF_ADDR[1]/N2HET2[3] (1)	D5	Output			
EMIF_ADDR[2]	E6	Output			
EMIF_ADDR[3]	E7	Output			
EMIF_ADDR[4]	E8	Output			
EMIF_ADDR[5]	E9	Output			
EMIF_ADDR[6]/N2HET2[11] (1)	C4	Output			
EMIF_ADDR[7]/N2HET2[13] (1)	C5	Output			
EMIF_ADDR[8]/N2HET2[15] (1)	C6	Output			
EMIF_ADDR[9]	C7	Output			
EMIF_ADDR[10]	C8	Output			
EMIF_ADDR[11]	C9	Output			
EMIF_ADDR[12]	C10	Output			

(1) These signals are tri-stated and pulled up by default after power-up. Any application that requires the EMIF must set the bit 31 of the system module general-purpose register GPREG1.

Copyright © 2012–2015, Texas Instruments Incorporated

Table 4-34. External Memory Interface (EMIF) (continued)

Terminal		Signal Type	Reset Pull State	Pull Type	Description
Signal Name	337 ZWT				
EMIF_DATA[0]	K15	I/O	Pull Up	Fixed 20 µA Pull Up	EMIF Data
EMIF_DATA[1]	L15	I/O			
EMIF_DATA[2]	M15	I/O			
EMIF_DATA[3]	N15	I/O			
EMIF_DATA[4]	E5	I/O			
EMIF_DATA[5]	F5	I/O			
EMIF_DATA[6]	G5	I/O			
EMIF_DATA[7]	K5	I/O			
EMIF_DATA[8]	L5	I/O			
EMIF_DATA[9]	M5	I/O			
EMIF_DATA[10]	N5	I/O			
EMIF_DATA[11]	P5	I/O			
EMIF_DATA[12]	R5	I/O			
EMIF_DATA[13]	R6	I/O			
EMIF_DATA[14]	R7	I/O			
EMIF_DATA[15]	R8	I/O			

Copyright © 2012–2015, Texas Instruments Incorporated

4.3.2.15 System Module Interface

Table 4-35. ZWT System Module Interface

Terminal		Signal Type	Reset Pull State	Pull Type	Description
Signal Name	337 ZWT				
nPORRST	W7	Input	Pull Down	Fixed 100 µA Pull Down	Power-on reset, cold reset External power supply monitor circuitry must drive nPORRST low when any of the supplies to the microcontroller fall out of the specified range. This terminal has a glitch filter. See Section 6.8.
nRST	B17	I/O	Pull Up	Fixed 100 µA Pull Up	System reset, warm reset, bidirectional. The internal circuitry indicates any reset condition by driving nRST low. The external circuitry can assert a system reset by driving nRST low. To ensure that an external reset is not arbitrarily generated, TI recommends that an external pull-up resistor is connected to this terminal. This terminal has a glitch filter. See Section 6.8.
nERROR	B14	I/O	Pull Down	Fixed 20 µA Pull Down	ESM Error Signal Indicates error of high severity. See Section 6.18.

4.3.2.16 Clock Inputs and Outputs

Table 4-36. ZWT Clock Inputs and Outputs

Terminal		Signal Type	Reset Pull State	Pull Type	Description
Signal Name	337 ZWT				
OSCIN	K1	Input	N/A	None	From external crystal/resonator, or external clock input
KELVIN_GND	L2	Input			Kelvin ground for oscillator
OSCOUT	L1	Output			To external crystal/resonator
ECLK	A12	I/O	Pull Down	Programmable, 20 µA	External prescaled clock output, or GIO.
GIOA[5]/**EXTCLKIN**/EPWM1A/N2HET1_PIN_nDIS	B5	Input	Pull Down	20 µA	External clock input #1
EXTCLKIN2	R9	Input			External clock input #2
VCCPLL	P11	1.2V Power	N/A	None	Dedicated core supply for PLL's

4.3.2.17 Test and Debug Modules Interface

Table 4-37. ZWT Test and Debug Modules Interface

Terminal		Signal Type	Reset Pull State	Pull Type	Description
Signal Name	337 ZWT				
TEST	U2	Input	Pull Down	Fixed 100 µA Pull Down	Test enable. This terminal must be connected to ground directly or via a pull-down resistor.
nTRST	D18	Input			JTAG test hardware reset
RTCK	A16	Output	N/A	None	JTAG return test clock
TCK	B18	Input	Pull Down	Fixed 100 µA Pull Down	JTAG test clock
TDI	A17	Input	Pull Up	Fixed 100 µA Pull Up	JTAG test data in
TDO	C18	Output	100 µA Pull Down	None	JTAG test data out
TMS	C19	Input	Pull Up	Fixed 100 µA Pull Up	JTAG test select

4.3.2.18 Flash Supply and Test Pads

Table 4-38. ZWT Flash Supply and Test Pads

Terminal		Signal Type	Reset Pull State	Pull Type	Description
Signal Name	337 ZWT				
VCCP	F8	3.3V Power	N/A	None	Flash pump supply
FLTP1	J5	-	N/A	None	Flash test pads. These terminals are reserved for TI use only. For proper operation these terminals must connect only to a test pad or not be connected at all [no connect (NC)].
FLTP2	H5				

Copyright © 2012–2015, Texas Instruments Incorporated

4.3.2.19 No Connects

Table 4-39. No Connects

Terminal		Signal Type	Reset Pull State	Pull Type	Description
Signal Name	337 ZWT				
NC	C11	-	N/A	None	No Connects. These balls are not connected to any internal logic and can be connected to the PCB ground without affecting the functionality of the device.
NC	C12	-	N/A	None	
NC	C13	-	N/A	None	
NC	C14	-	N/A	None	
NC	C15	-	N/A	None	
NC	C16	-	N/A	None	
NC	C17	-	N/A	None	
NC	D6	-	N/A	None	
NC	D7	-	N/A	None	
NC	D8	-	N/A	None	
NC	D9	-	N/A	None	
NC	D10	-	N/A	None	
NC	D11	-	N/A	None	
NC	D12	-	N/A	None	
NC	D13	-	N/A	None	
NC	D14	-	N/A	None	
NC	D15	-	N/A	None	
NC	E4	-	N/A	None	
NC	E14	-	N/A	None	
NC	E15	-	N/A	None	
NC	F4	-	N/A	None	
NC	F15	-	N/A	None	
NC	F16	-	N/A	None	
NC	F17	-	N/A	None	
NC	G4	-	N/A	None	
NC	G15	-	N/A	None	
NC	H15	-	N/A	None	
NC	J15	-	N/A	None	
NC	J16	-	N/A	None	
NC	K4	-	N/A	None	
NC	K16	-	N/A	None	
NC	L4	-	N/A	None	
NC	L16	-	N/A	None	
NC	L18	-	N/A	None	
NC	L19	-	N/A	None	
NC	M4	-	N/A	None	
NC	M16	-	N/A	None	
NC	N4	-	N/A	None	
NC	N16	-	N/A	None	
NC	N18	-	N/A	None	
NC	P4	-	N/A	None	

Copyright © 2012–2015, Texas Instruments Incorporated

Table 4-39. No Connects (continued)

Terminal		Signal Type	Reset Pull State	Pull Type	Description
Signal Name	337 ZWT				
NC	P15	-	N/A	None	No Connects. These balls are not connected to any internal logic and can be connected to the PCB ground without affecting the functionality of the device.
NC	P16	-	N/A	None	
NC	P17	-	N/A	None	
NC	R1	-	N/A	None	
NC	R10	-	N/A	None	
NC	R11	-	N/A	None	
NC	R12	-	N/A	None	
NC	R13	-	N/A	None	
NC	R14	-	N/A	None	
NC	R15	-	N/A	None	
NC	T2	-	N/A	None	
NC	T3	-	N/A	None	
NC	T4	-	N/A	None	
NC	T5	-	N/A	None	
NC	T6	-	N/A	None	
NC	T7	-	N/A	None	
NC	T8	-	N/A	None	
NC	T9	-	N/A	None	
NC	T10	-	N/A	None	
NC	T11	-	N/A	None	
NC	T13	-	N/A	None	
NC	T14	-	N/A	None	
NC	U3	-	N/A-	None	
NC	U4	-	N/A	None	
NC	U5	-	N/A	None	
NC	U6	-	N/A	None	
NC	U7	-	N/A	None	
NC	U8	-	N/A	None	
NC	U9	-	N/A	None	
NC	U10	-	N/A	None	
NC	U11	-	N/A	None	
NC	U12	-	N/A	None	
NC	V3	-	N/A	None	
NC	V4	-	N/A	None	
NC	V11	-	N/A	None	
NC	V12	-	N/A	None	
NC	W4	-	N/A	None	
NC	W11	-	N/A	None	
NC	W12	-	N/A	None	
NC	W13	-	N/A	None	

Copyright © 2012–2015, Texas Instruments Incorporated

4.3.2.20 Supply for Core Logic: 1.2V nominal

Table 4-40. ZWT Supply for Core Logic: 1.2V nominal

Terminal		Signal Type	Reset Pull State	Pull Type	Description
Signal Name	337 ZWT				
VCC	F9	1.2V Power	N/A	None	Core supply
VCC	F10				
VCC	H10				
VCC	J14				
VCC	K6				
VCC	K8				
VCC	K12				
VCC	K14				
VCC	L6				
VCC	M10				
VCC	P10				

4.3.2.21 Supply for I/O Cells: 3.3V nominal

Table 4-41. ZWT Supply for I/O Cells: 3.3V nominal

Terminal		Signal Type	Reset Pull State	Pull Type	Description
Signal Name	337 ZWT				
VCCIO	F6	3.3V Power	N/A	None	Operating supply for I/Os
VCCIO	F7				
VCCIO	F11				
VCCIO	F12				
VCCIO	F13				
VCCIO	F14				
VCCIO	G6				
VCCIO	G14				
VCCIO	H6				
VCCIO	H14				
VCCIO	J6				
VCCIO	L14				
VCCIO	M6				
VCCIO	M14				
VCCIO	N6				
VCCIO	N14				
VCCIO	P6				
VCCIO	P7				
VCCIO	P8				
VCCIO	P9				
VCCIO	P12				
VCCIO	P13				
VCCIO	P14				

Copyright © 2012–2015, Texas Instruments Incorporated

4.3.2.22 Ground Reference for All Supplies Except VCCAD

Table 4-42. ZWT Ground Reference for All Supplies Except VCCAD

Terminal		Signal Type	Reset Pull State	Pull Type	Description
Signal Name	337 ZWT				
VSS	A1	Ground	N/A	None	Ground reference
VSS	A2				
VSS	A18				
VSS	A19				
VSS	B1				
VSS	B19				
VSS	H8				
VSS	H9				
VSS	H11				
VSS	H12				
VSS	J8				
VSS	J9				
VSS	J10				
VSS	J11				
VSS	J12				
VSS	K9				
VSS	K10				
VSS	K11				
VSS	L8				
VSS	L9				
VSS	L10				
VSS	L11				
VSS	L12				
VSS	M8				
VSS	M9				
VSS	M11				
VSS	M12				
VSS	V1				
VSS	W1				
VSS	W2				

Copyright © 2012–2015, Texas Instruments Incorporated

5 Specifications

5.1 Absolute Maximum Ratings Over Operating Free-Air Temperature Range (1)

		MIN	MAX	UNIT
Supply voltage range:	V_{CC} (2)	-0.3	1.43	V
	V_{CCIO}, V_{CCP} (2)	-0.3	4.6	V
	V_{CCAD}	-0.3	6.25	V
Input voltage range:	All input pins, with exception of ADC pins	-0.3	4.6	V
	ADC input pins	-0.3	6.25	V
Input clamp current:	I_{IK} (V_I < 0 or V_I > V_{CCIO}) All pins, except AD1IN[23:0] or AD2IN[15:0]	-20	+20	mA
	I_{IK} (V_I < 0 or V_I > V_{CCAD}) AD1IN[23:0] or AD2IN[15:0]	-10	+10	mA
	Total	-40	+40	mA
Operating free-air temperature range, T_A:		-40	125	°C
Operating junction temperature range, T_J:		-40	150	°C
Storage temperature range, T_{stg}		-65	150	°C

(1) Stresses beyond those listed under "absolute maximum ratings" may cause permanent damage to the device. These are stress ratings only, and functional operation of the device at these or any other conditions beyond those indicated under "recommended operating conditions" is not implied. Exposure to absolute-maximum-rated conditions for extended periods may affect device reliability.
(2) Maximum-rated conditions for extended periods may affect device reliability. All voltage values are with respect to their associated grounds.

5.2 ESD Ratings

				VALUE	UNIT
V_{ESD}	Electrostatic discharge (ESD) performance:	Human body model (HBM), per AEC Q100-002 (1)		±2	kV
		Charged device model (CDM), per AEC Q100-011	All pins	±500	V
			Corner pins on 144-pin PGE (1, 36, 37, 72, 73, 108, 109, 144)	±750	V
			Corner balls on 337-ball ZWT (A1, A19, W1, W19)	±750	V

(1) AEC Q100-002 indicates HBM stressing is done in accordance with the ANSI/ESDA/JEDEC JS-001 specification.

5.3 Power-On Hours (POH) (1) (2)

NOMINAL CORE VOLTAGE (V_{CC})	JUNCTION TEMPERATURE (Tj)	LIFETIME POH
1.2	105ºC	100K

(1) This information is provided solely for your convenience and does not extend or modify the warranty provided under TI's standard terms and conditions for TI semiconductor products.
(2) To avoid significant degradation, the device power-on hours (POH) must be limited to those specified in this table. To convert to equivalent POH for a specific temperature profile, see the *Calculating Equivalent Power-on-Hours for Hercules Safety MCUs* Application Report (SPNA207).

Copyright © 2012–2015, Texas Instruments Incorporated

5.4 Device Recommended Operating Conditions(1)

		MIN	NOM	MAX	UNIT
V_{CC}	Digital logic supply voltage (Core)	1.14	1.2	1.32	V
V_{CCPLL}	PLL Supply Voltage	1.14	1.2	1.32	V
V_{CCIO}	Digital logic supply voltage (I/O)	3	3.3	3.6	V
V_{CCAD}	MibADC supply voltage	3		5.25	V
V_{CCP}	Flash pump supply voltage	3	3.3	3.6	V
V_{SS}	Digital logic supply ground		0		V
V_{SSAD}	MibADC supply ground	-0.1		0.1	V
$V_{ADREFHI}$	A-to-D high-voltage reference source	V_{SSAD}		V_{CCAD}	V
$V_{ADREFLO}$	A-to-D low-voltage reference source	V_{SSAD}		V_{CCAD}	V
V_{SLEW}	Maximum positive slew rate for V_{CCIO}, V_{CCAD} and V_{CCP} supplies			1	V/µs
T_A	Operating free-air temperature	-40		125	°C
T_J	Operating junction temperature(2)	-40		150	°C

(1) All voltages are with respect to V_{SS}, except V_{CCAD}, which is with respect to V_{SSAD}
(2) Reliability data is based upon a temperature profile that is equivalent to 100,000 power-on hours at 105°C junction temperature.

5.5 Switching Characteristics Over Recommended Operating Conditions for Clock Domains

Table 5-1. Clock Domain Timing Specifications

PARAMETER	DESCRIPTION	CONDITIONS		MAX	UNIT
f_{HCLK}	HCLK - System clock frequency	PGE	Pipeline mode enabled	160	MHz
			Pipeline mode disabled	50	MHz
		ZWT	Pipeline mode enabled	180	MHz
			Pipeline mode disabled	50	MHz
f_{GCLK}	GCLK - CPU clock frequency			f_{HCLK}	MHz
f_{VCLK}	VCLK - Primary peripheral clock frequency			100	MHz
f_{VCLK2}	VCLK2 - Secondary peripheral clock frequency			100	MHz
f_{VCLK3}	VCLK3 - Secondary peripheral clock frequency			100	MHz
f_{VCLK4}	VCLK4 - Secondary peripheral clock frequency			150	MHz
f_{VCLKA1}	VCLKA1 - Primary asynchronous peripheral clock frequency			100	MHz
f_{VCLKA2}	VCLKA2 - Secondary asynchronous peripheral clock frequency			100	MHz
f_{VCLKA3}	VCLKA3 - Primary asynchronous peripheral clock frequency			100	MHz
f_{VCLKA4}	VCLKA4 - Secondary asynchronous peripheral clock frequency			100	MHz
f_{RTICLK}	RTICLK - clock frequency			f_{VCLK}	MHz

5.6 Wait States Required

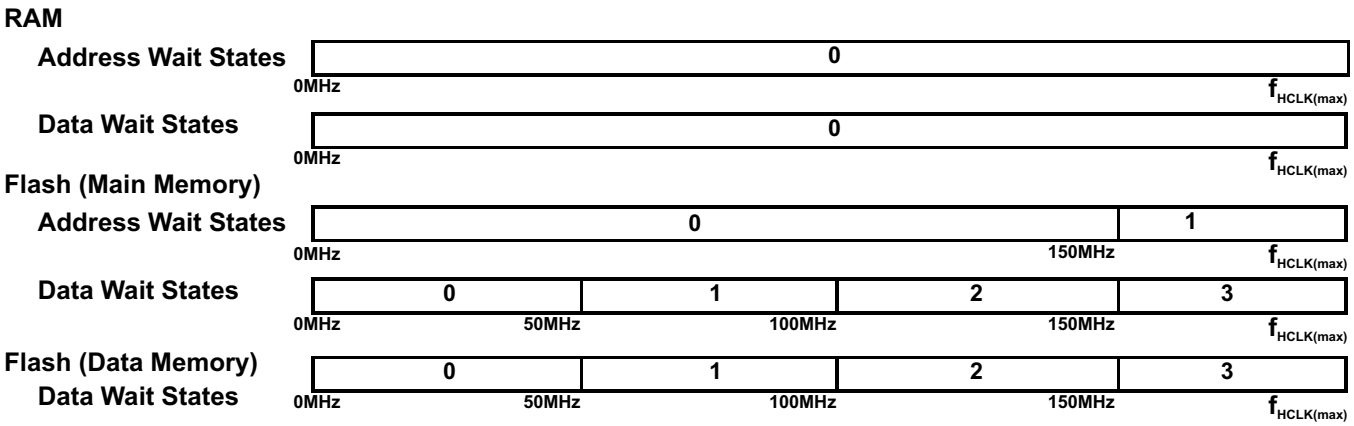

Figure 5-1. Wait States Scheme

As shown in the figure above, the TCM RAM can support program and data fetches at full CPU speed without any address or data wait states required.

The TCM flash can support zero address and data wait states up to a CPU speed of 50 MHz in nonpipelined mode. The flash supports a maximum CPU clock speed of 160 MHz in pipelined mode for the PGE Package and 180 MHz for the ZWT package, with one address wait state and three data wait states.

The flash wrapper defaults to non-pipelined mode with zero address wait state and one random-read data wait state.

Copyright © 2012–2015, Texas Instruments Incorporated

5.7 Power Consumption Over Recommended Operating Conditions

PARAMETER		TEST CONDITIONS	MIN	TYP	MAX	UNIT
I_{CC}	V_{CC} digital supply current (operating mode) $f_{VCLK} = f_{HCLK}/2$; Flash in pipelined mode; V_{CCmax}	f_{HCLK} = 160MHz		175 (1)	360 (2)	mA
		f_{HCLK} = 180MHz		195(1)	380(2)	
	V_{CC} Digital supply current (LBIST/PBIST mode)	LBIST/PBIST clock frequency = 80MHz		215(1)	475(3)(4)	mA
		LBIST/PBIST clock frequency = 90MHz		240(1)	475 (3)(4)	mA
I_{CCPLL}	V_{CCPLL} digital supply current (operating mode)	$V_{CCPLL} = V_{CCPLLmax}$			10	mA
I_{CCIO}	V_{CCIO} Digital supply current (operating mode.	No DC load, V_{CCmax}			10	mA
I_{CCAD}	V_{CCAD} supply current (operating mode)	Single ADC operational, $V_{CCADmax}$			15	mA
		Both ADCs operational, $V_{CCADmax}$			30	
$I_{ADREFHI}$	AD_{REFHI} supply current (operating mode)	Single ADC operational, $AD_{REFHImax}$			3	mA
		Both ADCs operational, $AD_{REFHImax}$			6	
I_{CCP}	V_{CCP} supply current	read from 1 bank and program another bank, V_{CCPmax}			55	mA

(1) The typical value is the average current for the nominal process corner and junction temperature of 25C.
(2) The maximum $I_{CC,}$ value can be derated
- linearly with voltage
- by 1 ma/MHz for lower operating frequency when f_{HCLK}= 2 * f_{VCLK}
- for lower junction temperature by the equation below where T_{JK} is the junction temperature in Kelvin and the result is in milliamperes. **$174 - 0.064e^{0.0187\ T_{JK}}$**

(3) The maximum $I_{CC,}$ value can be derated
- linearly with voltage
- by 1.5 ma/MHz for lower operating frequency
- for lower junction temperature by the equation below where T_{JK} is the junction temperature in Kelvin and the result is in milliamperes. **$186 - 0.064\ e^{0.0187\ T_{JK}}$**

(4) LBIST and PBIST currents are for a short duration, typically less than 10ms. They are usually ignored for thermal calculations for the device and the voltage regulator

Copyright © 2012–2015, Texas Instruments Incorporated

5.8 Input/Output Electrical Characteristics Over Recommended Operating Conditions[1]

PARAMETER			TEST CONDITIONS	MIN	TYP	MAX	UNIT
V_{hys}	Input hysteresis	All inputs (except FRAYRX1, FRAYRX2)		180			mV
		FRAYRX1, FRAYRX2		100			mV
V_{IL}	Low-level input voltage	All inputs[2] (except FRAYRX1, FRAYRX2)		-0.3		0.8	V
		FRAYRX1, FRAYRX2				0.4 V_{CCIO}	V
V_{IH}	High-level input voltage	All inputs[2] (except FRAYRX1, FRAYRX2)		2		V_{CCIO} + 0.3	V
		FRAYRX1, FRAYRX2		0.6 V_{CCIO}			V
V_{OL}	Low-level output voltage		$I_{OL} = I_{OLmax}$			0.2 V_{CCIO}	V
			I_{OL} = 50 µA, standard output mode			0.2	
			I_{OL} = 50 µA, low-EMI output mode (see Section 5.13)			0.2 V_{CCIO}	
V_{OH}	High-level output voltage		$I_{OH} = I_{OHmax}$	0.8 V_{CCIO}			V
			I_{OH} = 50 µA, standard output mode	V_{CCIO} -0.3			
			I_{OH} = 50 µA, low-EMI output mode (see Section 5.13)	0.8 V_{CCIO}			
I_{IK}	Input clamp current (I/O pins)[3]		$V_I < V_{SSIO}$ - 0.3 or $V_I > V_{CCIO}$ + 0.3	-3.5		3.5	mA
I_I	Input current (I/O pins)	I_{IH} Pulldown 20µA	$V_I = V_{CCIO}$	5		40	µA
		I_{IH} Pulldown 100µA	$V_I = V_{CCIO}$	40		195	
		I_{IL} Pullup 20µA	$V_I = V_{SS}$	-40		-5	
		I_{IL} Pullup 100µA	$V_I = V_{SS}$	-195		-40	
		All other pins	No pullup or pulldown	-1		1	
C_I	Input capacitance				2		pF
C_O	Output capacitance				3		pF

(1) Source currents (out of the device) are negative while sink currents (into the device) are positive.
(2) This does not apply to the nPORRST pin.
(3) If the input voltage extends outside of the range V_{IL} to V_{IH} then the input current must be limited to I_{IK} to maintain proper operation. See the application note SPNA201 for more information on limiting input clamp currents.

5.9 Thermal Resistance Characteristics

Table 5-2 shows the thermal resistance characteristics for the QFP - PGE mechanical package.

Table 5-3 shows the thermal resistance characteristics for the BGA - ZWT mechanical package.

Table 5-2. Thermal Resistance Characteristics (PGE Package)

		°C/W
$R\Theta_{JA}$	Junction-to-free air thermal resistance, Still air using JEDEC 2S2P test board	40
$R\Theta_{JB}$	Junction-to-board thermal resistance	27.2
$R\Theta_{JC}$	Junction-to-case thermal resistance	7.3
Ψ_{JT}	Junction-to-package top, Still air	0.10

Copyright © 2012–2015, Texas Instruments Incorporated

Table 5-3. Thermal Resistance Characteristics (ZWT Package)

		°C/W
$R\Theta_{JA}$	Junction-to-free air thermal resistance, Still air (includes 5x5 thermal via cluster in 2s2p PCB connected to 1st ground plane)	18.8
$R\Theta_{JB}$	Junction-to-board thermal resistance	14.1
$R\Theta_{JC}$	Junction-to-case thermal resistance	7.1
Ψ_{JT}	Junction-to-package top, Still air (includes 5x5 thermal via cluster in 2s2p PCB connected to 1st ground plane)	0.33

5.10 Output Buffer Drive Strengths

Table 5-4. Output Buffer Drive Strengths

LOW-LEVEL OUTPUT CURRENT, I_{OL} for $V_I=V_{OLmax}$ or HIGH-LEVEL OUTPUT CURRENT, I_{OH} for $V_I=V_{OHmin}$	SIGNALS
8 mA	FRAYTX2, FRAYTX1, FRAYTXEN1, FRAYTXEN2, MIBSPI5CLK, MIBSPI5SOMI[0], MIBSPI5SOMI[1], MIBSPI5SOMI[2], MIBSPI5SOMI[3], MIBSPI5SIMO[0], MIBSPI5SIMO[1], MIBSPI5SIMO[2], MIBSPI5SIMO[3], TMS, TDI, TDO, RTCK, SPI4CLK, SPI4SIMO, SPI4SOMI, nERROR, N2HET2[1], N2HET2[3], N2HET2[5], N2HET2[7], N2HET2[9], N2HET2[11], N2HET2[13], N2HET2[15] ECAP1, ECAP4, ECAP5, ECAP6 EQEP1I, EQEP1S, EQEP2I, EQEP2S EPWM1A, EPWM1B, EPWM1SYNCO, ETPW2A, EPWM2B, EPWM3A, EPWM3B, EPWM4A, EPWM4B, EPWM5A, EPWM5B, EPWM6A, EPWM6B, EPWM7A, EPWM7B EMIF_ADDR[0:12], EMIF_BA[0:1], EMIF_CKE, EMIF_CLK, EMIF_DATA[0:15], EMIF_nCAS, EMIF_nCS[0:4], EMIF_nDQM[0:1], EMIF_nOE, EMIF_nRAS, EMIF_nWAIT, EMIF_nWE, EMIF_RNW
4 mA	TEST, MIBSPI3SOMI, MIBSPI3SIMO, MIBSPI3CLK, MIBSPI1SIMO, MIBSPI1SOMI, MIBSPI1CLK, ECAP2, ECAP3 nRST
2 mA zero-dominant	AD1EVT, CAN1RX, CAN1TX, CAN2RX, CAN2TX, CAN3RX, CAN3TX, GIOA[0-7], GIOB[0-7], LINRX, LINTX, MIBSPI1nCS[0], MIBSPI1nCS[1-3], MIBSPI1nENA, MIBSPI3nCS[0-3], MIBSPI3nENA, MIBSPI5nCS[0-3], MIBSPI5nENA, N2HET1[0-31], N2HET2[0], N2HET2[2], N2HET2[4], N2HET2[5], N2HET2[6], N2HET2[7], N2HET2[8], N2HET2[9], N2HET2[10], N2HET2[11], N2HET2[12], N2HET2[13], N2HET2[14], N2HET2[15], N2HET2[16], N2HET2[18], SPI2nCS[0], SPI2nENA, SPI4nCS[0], SPI4nENA
selectable 8 mA / 2 mA	ECLK, SPI2CLK, SPI2SIMO, SPI2SOMI The default output buffer drive strength is 8 mA for these signals.

Copyright © 2012–2015, Texas Instruments Incorporated

Table 5-5. Selectable 8 mA/2 mA Control

Signal	Control Bit	Address	8 mA	2 mA
ECLK	SYSPC10[0]	0xFFFF FF78	0	1
SPI2CLK	SPI2PC9[9]	0xFFF7 F668	0	1
SPI2SIMO	SPI2PC9[10]	0xFFF7 F668	0	1
SPI2SOMI	SPI2PC9[11] (1)	0xFFF7 F668	0	1

(1) Either SPI2PC9[11] or SPI2PC9[24] can change the output strength of the SPI2SOMI pin. In case of a 32-bit write where these two bits differ, SPI2PC9[11] determines the drive strength.

5.11 Input Timings

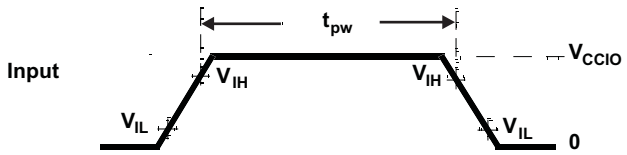

Figure 5-2. TTL-Level Inputs

Table 5-6. Timing Requirements for Inputs (1)

Parameter		MIN	MAX	Unit
t_{pw}	Input minimum pulse width	$t_{c(VCLK)}$ + 10 (2)		ns
t_{in_slew}	Time for input signal to go from V_{IL} to V_{IH} or from V_{IH} to V_{IL}		1	ns

(1) $t_{c(VCLK)}$ = peripheral VBUS clock cycle time = 1 / $f_{(VCLK)}$
(2) The timing shown above is only valid for pin used in general-purpose input mode.

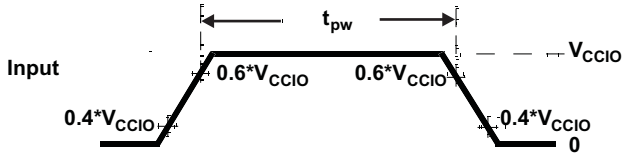

Figure 5-3. Flexray Inputs

Table 5-7. Timing Requirements for FlexRay Inputs (1)

Parameter		MIN	MAX	Unit
t_{pw}	Input minimum pulse width to meet the Flexray sampling requirement	$t_{c(VCLKA2)}$ + 2.5		ns

(1) $t_{c(VCLKA2)}$ = sample clock cycle time for FlexRay = 1 / $f_{(VCLKA2)}$

Copyright © 2012–2015, Texas Instruments Incorporated

5.12 Output Timings

Table 5-8. Switching Characteristics for Output Timings versus Load Capacitance ©$_L$)

Parameter				MIN	MAX	Unit
Rise time, t_r	8 mA low EMI pins (see Table 5-4)		CL = 15 pF		2.5	ns
			CL = 50 pF		4	
			CL = 100 pF		7.2	
			CL = 150 pF		12.5	
Fall time, t_f			CL = 15 pF		2.5	ns
			CL = 50 pF		4	
			CL = 100 pF		7.2	
			CL = 150 pF		12.5	
Rise time, t_r	4 mA low EMI pins (see Table 5-4)		CL = 15 pF		5.6	ns
			CL = 50 pF		10.4	
			CL = 100 pF		16.8	
			CL = 150 pF		23.2	
Fall time, t_f			CL = 15 pF		5.6	ns
			CL= 50 pF		10.4	
			CL = 100 pF		16.8	
			CL = 150 pF		23.2	
Rise time, t_r	2 mA-z low EMI pins (see Table 5-4)		CL = 15 pF		8	ns
			CL = 50 pF		15	
			CL = 100 pF		23	
			CL = 150 pF		33	
Fall time, t_f			CL = 15 pF		8	ns
			CL = 50 pF		15	
			CL = 100 pF		23	
			CL = 150 pF		33	
Rise time, t_r	Selectable 8 mA / 2 mA-z pins (see Table 5-4)	8 mA mode	CL = 15 pF		2.5	ns
			CL = 50 pF		4	
			CL = 100 pF		7.2	
			CL = 150 pF		12.5	
Fall time, t_f			CL = 15 pF		2.5	ns
			CL = 50 pF		4	
			CL = 100 pF		7.2	
			CL = 150 pF		12.5	
Rise time, t_r		2 mA-z mode	CL = 15 pF		8	ns
			CL = 50 pF		15	
			CL = 100 pF		23	
			CL = 150 pF		33	
Fall time, t_f			CL = 15 pF		8	ns
			CL = 50 pF		15	
			CL = 100 pF		23	
			CL = 150 pF		33	

Copyright © 2012–2015, Texas Instruments Incorporated

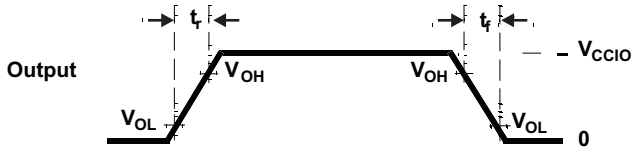

Figure 5-4. CMOS-Level Outputs

Table 5-9. Timing Requirements for Outputs(1)

Parameter		MIN	MAX	UNIT
$t_{d(parallel_out)}$	Delay between low to high, or high to low transition of general-purpose output signals that can be configured by an application in parallel, e.g. all signals in a GIOA port, or all N2HET1 signals, etc.		6	ns

(1) This specification does not account for any output buffer drive strength differences or any external capacitive loading differences. Check Table 5-4 for output buffer drive strength information on each signal.

Copyright © 2012–2015, Texas Instruments Incorporated

5.13 Low-EMI Output Buffers

The low-EMI output buffer has been designed explicitly to address the issue of decoupling sources of emissions from the pins which they drive. This is accomplished by adaptively controlling the impedance of the output buffer, and is particularly effective with capacitive loads.

This is not the default mode of operation of the low-EMI output buffers and must be enabled by setting the system module GPCR1 register for the desired module or signal, as shown in . The adaptive impedance control circuit monitors the DC bias point of the output signal. The buffer internally generates two reference levels, VREFLOW and VREFHIGH, which are set to approximately 10% and 90% of V_{CCIO}, respectively.

Once the output buffer has driven the output to a low level, if the output voltage is below VREFLOW, then the output buffer's impedance will increase to hi-Z. A high degree of decoupling between the internal ground bus and the output pin will occur with capacitive loads, or any load in which no current is flowing, e.g. the buffer is driving low on a resistive path to ground. Current loads on the buffer which attempt to pull the output voltage above VREFLOW will be opposed by the buffer's output impedance so as to maintain the output voltage at or below VREFLOW.

Conversely, once the output buffer has driven the output to a high level, if the output voltage is above VREFHIGH then the output buffer's impedance will again increase to hi-Z. A high degree of decoupling between internal power bus ad output pin will occur with capacitive loads or any loads in which no current is flowing, e.g. buffer is driving high on a resistive path to VCCIO. Current loads on the buffer which attempt to pull the output voltage below VREFHIGH will be opposed by the buffer's output impedance so as to maintain the output voltage at or above VREFHIGH.

The bandwidth of the control circuitry is relatively low, so that the output buffer in adaptive impedance control mode cannot respond to high-frequency noise coupling into the buffer's power buses. In this manner, internal bus noise approaching 20% peak-to-peak of VCCIO can be rejected.

Unlike standard output buffers which clamp to the rails, an output buffer in impedance control mode will allow a positive current load to pull the output voltage up to VCCIO + 0.6V without opposition. Also, a negative current load will pull the output voltage down to VSSIO – 0.6V without opposition. This is not an issue since the actual clamp current capability is always greater than the IOH / IOL specifications.

The low-EMI output buffers are automatically configured to be in the standard buffer mode when the device enters a low-power mode.

Table 5-10. Low-EMI Output Buffer Hookup

Module or Signal Name	Control Register to Enable Low-EMI Mode
Module: MibSPI1	GPREG1.0
Module: SPI2	GPREG1.1
Module: MibSPI3	GPREG1.2
Reserved	GPREG1.3
Module: MibSPI5	GPREG1.4
Module: FlexRay	GPREG1.5
Module: EMIF	GPREG1.6
Reserved	GPREG1.7
Signal: TMS	GPREG1.8
Signal: TDI	GPREG1.9
Signal: TDO	GPREG1.10
Signal: RTCK	GPREG1.11
Signal: TEST	GPREG1.12
Signal: nERROR	GPREG1.13
Signal: AD1EVT	GPREG1.14

Copyright © 2012–2015, Texas Instruments Incorporated

6 System Information and Electrical Specifications

6.1 Device Power Domains

The device core logic is split up into multiple power domains to optimize the Self-Test Clock Configuration power for a given application use case. There are 7 power domains in total: PD1, PD2, PD3, PD4, PD5, RAM_PD1, and RAM_PD2. Refer to Section 1.4 for more information.

PD1 is an "always-ON" power domain, which cannot be turned off. Each of the other power domains can be turned OFF one time during device initialization as per the application requirement. Refer to the Power Management Module (PMM) chapter of TMS570LS12x/11x Technical Reference Manual (SPNU515) for more details.

NOTE

The clocks to a module must be turned off before powering down the core domain that contains the module.

NOTE

The logic in the modules that are powered down loses its power completely. Any access to modules that are powered down results in an abort being generated. When power is restored, the modules power-up to their default states (after normal power-up). No register or memory contents are preserved in the core domains that are turned off.

6.2 Voltage Monitor Characteristics

A voltage monitor is implemented on this device. The purpose of this voltage monitor is to eliminate the requirement for a specific sequence when powering up the core and I/O voltage supplies.

6.2.1 Important Considerations

- The voltage monitor does not eliminate the need of a voltage supervisor circuit to ensure that the device is held in reset when the voltage supplies are out of range.
- The voltage monitor only monitors the core supply (VCC) and the I/O supply (VCCIO). The other supplies are not monitored by the VMON. For example, if the VCCAD or VCCP are supplied from a source different from that for VCCIO, then there is no internal voltage monitor for the VCCAD and VCCP supplies.

6.2.2 Voltage Monitor Operation

The voltage monitor generates the Power Good MCU signal (PGMCU) as well as the I/Os Power Good IO signal (PGIO) on the device. During power-up or power-down, the PGMCU and PGIO are driven low when the core or I/O supplies are lower than the specified minimum monitoring thresholds. The PGIO and PGMCU being low isolates the core logic as well as the I/O controls during the power-up or power-down of the supplies. This allows the core and I/O supplies to be powered up or down in any order.

When the voltage monitor detects a low voltage on the I/O supply, it will assert a power-on reset. When the voltage monitor detects an out-of-range voltage on the core supply, it asynchronously makes all output pins high impedance, and asserts a power-on reset. The voltage monitor is disabled when the device enters a low power mode.

The VMON also incorporates a glitch filter for the nPORRST input. Refer to Section 6.3.3.1 for the timing information on this glitch filter.

Copyright © 2012–2015, Texas Instruments Incorporated

Table 6-1. Voltage Monitoring Specifications

PARAMETER			MIN	TYP	MAX	UNIT
V_{MON}	Voltage monitoring thresholds	VCC low - VCC level below this threshold is detected as too low.	0.75	0.9	1.13	V
		VCC high - VCC level above this threshold is detected as too high.	1.40	1.7	2.1	
		VCCIO low - VCCIO level below this threshold is detected as too low.	1.85	2.4	2.9	

6.2.3 Supply Filtering

The VMON has the capability to filter glitches on the VCC and VCCIO supplies.

The following table shows the characteristics of the supply filtering. Glitches in the supply larger than the maximum specification cannot be filtered.

Table 6-2. VMON Supply Glitch Filtering Capability

Parameter	MIN	MAX
Width of glitch on VCC that can be filtered	250 ns	1 µs
Width of glitch on VCCIO that can be filtered	250 ns	1 µs

6.3 Power Sequencing and Power On Reset

6.3.1 Power-Up Sequence

There is no timing dependency between the ramp of the VCCIO and the VCC supply voltage. The power-up sequence starts with the I/O voltage rising above the minimum I/O supply threshold, (see Table 6-4 for more details), core voltage rising above the minimum core supply threshold and the release of power-on reset. The high frequency oscillator will start up first and its amplitude will grow to an acceptable level. The oscillator start up time is dependent on the type of oscillator and is provided by the oscillator vendor. The different supplies to the device can be powered up in any order.

The device goes through the following sequential phases during power up.

Table 6-3. Power-Up Phases

Oscillator start-up and validity check	1032 oscillator cycles
eFuse autoload	1160 oscillator cycles
Flash pump power-up	688 oscillator cycles
Flash bank power-up	617 oscillator cycles
Total	**3497 oscillator cycles**

The CPU reset is released at the end of the above sequence and fetches the first instruction from address 0x00000000.

6.3.2 Power-Down Sequence

The different supplies to the device can be powered down in any order.

6.3.3 Power-On Reset: nPORRST

This is the power-on reset. This reset must be asserted by an external circuitry whenever the I/O or core supplies are outside the specified recommended range. This signal has a glitch filter on it. It also has an internal pulldown.

6.3.3.1 nPORRST Electrical and Timing Requirements

Table 6-4. Electrical Requirements for nPORRST

NO	Parameter		MIN	MAX	Unit
	V_{CCPORL}	V_{CC} low supply level when nPORRST must be active during power-up		0.5	V
	V_{CCPORH}	V_{CC} high supply level when nPORRST must remain active during power-up and become active during power down	1.14		V
	$V_{CCIOPORL}$	V_{CCIO} / V_{CCP} low supply level when nPORRST must be active during power-up		1.1	V
	$V_{CCIOPORH}$	V_{CCIO} / V_{CCP} high supply level when nPORRST must remain active during power-up and become active during power down	3.0		V
	$V_{IL(PORRST)}$	Low-level input voltage of nPORRST V_{CCIO} > 2.5V		0.2 * V_{CCIO}	V
		Low-level input voltage of nPORRST V_{CCIO} < 2.5V		0.5	V
3	$t_{su(PORRST)}$	Setup time, nPORRST active before V_{CCIO} and V_{CCP} > $V_{CCIOPORL}$ during power-up	0		ms
6	$t_{h(PORRST)}$	Hold time, nPORRST active after V_{CC} > V_{CCPORH}	1		ms
7	$t_{su(PORRST)}$	Setup time, nPORRST active before V_{CC} < V_{CCPORH} during power down	2		µs
8	$t_{h(PORRST)}$	Hold time, nPORRST active after V_{CCIO} and V_{CCP} > $V_{CCIOPORH}$	1		ms
9	$t_{h(PORRST)}$	Hold time, nPORRST active after V_{CC} < V_{CCPORL}	0		ms

Copyright © 2012–2015, Texas Instruments Incorporated

Table 6-4. Electrical Requirements for nPORRST (continued)

NO	Parameter		MIN	MAX	Unit
	$t_{f(nPORRST)}$	Filter time nPORRST pin; pulses less than MIN will be filtered out, pulses greater than MAX will generate a reset.	475	2000	ns

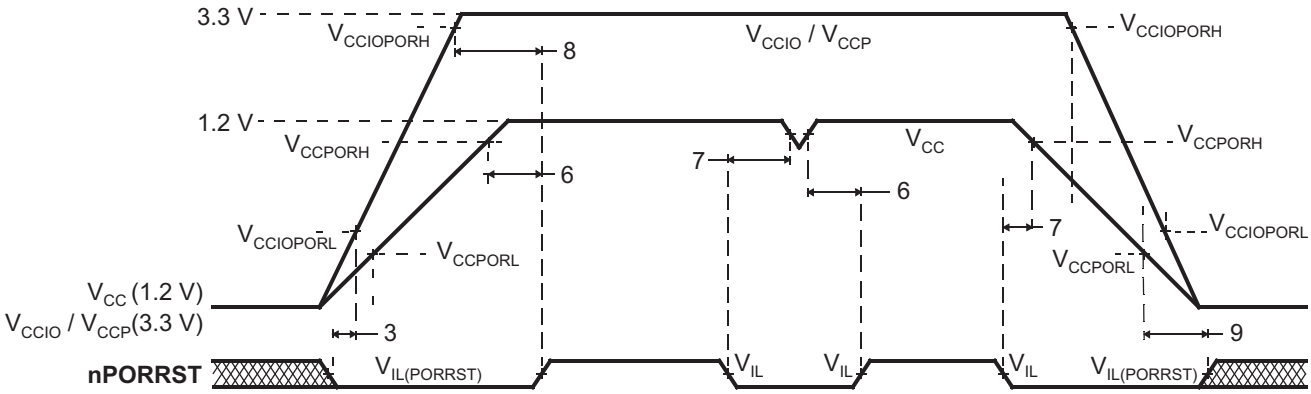

NOTE: There is no timing dependency between the ramp of the VCCIO and the VCC supply voltage; this is just an exemplary drawing.

Figure 6-1. nPORRST Timing Diagram

6.4 Warm Reset (nRST)

This is a bidirectional reset signal. The internal circuitry drives the signal low on detecting any device reset condition. An external circuit can assert a device reset by forcing the signal low. On this terminal, the output buffer is implemented as an open drain (drives low only). To ensure an external reset is not arbitrarily generated, TI recommends that an external pullup resistor is connected to this terminal.

This terminal has a glitch filter. It also has an internal pullup.

6.4.1 Causes of Warm Reset

Table 6-5. Causes of Warm Reset

DEVICE EVENT	SYSTEM STATUS FLAG
Power-Up Reset	Exception Status Register, bit 15
Oscillator fail	Global Status Register, bit 0
PLL slip	Global Status Register, bits 8 and 9
Watchdog exception / Debugger reset	Exception Status Register, bit 13
Software Reset	Exception Status Register, bit 4
External Reset	Exception Status Register, bit 3

6.4.2 nRST Timing Requirements

Table 6-6. nRST Timing Requirements

PARAMETER		MIN	MAX	UNIT
$t_{v(RST)}$	Valid time, nRST active after nPORRST inactive	2256 $t_{c(OSC)}$ (1)		ns
	Valid time, nRST active (all other System reset conditions)	32 $t_{c(VCLK)}$		
$t_{f(nRST)}$	Filter time nRST pin; pulses less than MIN will be filtered out, pulses greater than MAX will generate a reset	475	2000	ns

(1) Assumes the oscillator has started up and stabilized before nPORRST is released ..

Copyright © 2012–2015, Texas Instruments Incorporated

6.5 ARM Cortex-R4F CPU Information

6.5.1 Summary of ARM Cortex-R4F CPU Features

The features of the ARM Cortex-R4F CPU include:

- An integer unit with integral Embedded ICE-RT logic.
- High-speed Advanced Microprocessor Bus Architecture (AMBA) Advanced eXtensible Interfaces (AXI) for Level two (L2) master and slave interfaces.
- Floating Point Coprocessor
- Dynamic branch prediction with a global history buffer, and a 4-entry return stack
- Low interrupt latency.
- Non-maskable interrupt.
- A Harvard Level one (L1) memory system with:
  - Tightly-Coupled Memory (TCM) interfaces with support for error correction or parity checking memories
  - ARMv7-R architecture Memory Protection Unit (MPU) with 12 regions
- Dual core logic for fault detection in safety-critical applications.
- An L2 memory interface:
  - Single 64-bit master AXI interface
  - 64-bit slave AXI interface to TCM RAM blocks
- A debug interface to a CoreSight Debug Access Port (DAP).
- A Performance Monitoring Unit (PMU).
- A Vectored Interrupt Controller (VIC) port.

For more information on the ARM Cortex-R4F CPU, see www.arm.com.

6.5.2 ARM Cortex-R4F CPU Features Enabled by Software

The following CPU features are disabled on reset and must be enabled by the application if required.

- ECC On Tightly-Coupled Memory (TCM) Accesses
- Hardware Vectored Interrupt (VIC) Port
- Floating Point Coprocessor
- Memory Protection Unit (MPU)

6.5.3 Dual Core Implementation

The device has two Cortex-R4F cores, where the output signals of both CPUs are compared in the CCM-R4 unit. To avoid common mode impacts the signals of the CPUs to be compared are delayed by 2 clock cycles as shown in Figure 6-3.

The CPUs have a diverse CPU placement given by following requirements:

- different orientation; for example, CPU1 = "north" orientation, CPU2 = "flip west" orientation
- dedicated guard ring for each CPU

Figure 6-2. Dual - CPU Orientation

6.5.4 Duplicate clock tree after GCLK

The CPU clock domain is split into two clock trees, one for each CPU, with the clock of the 2nd CPU running at the same frequency and in phase to the clock of CPU1. See Figure 6-3.

6.5.5 ARM Cortex-R4F CPU Compare Module (CCM-R4) for Safety

This device has two ARM Cortex-R4F CPU cores, where the output signals of both CPUs are compared in the CCM-R4 unit. To avoid common mode impacts the signals of the CPUs to be compared are delayed in a different way as shown in the figure below.

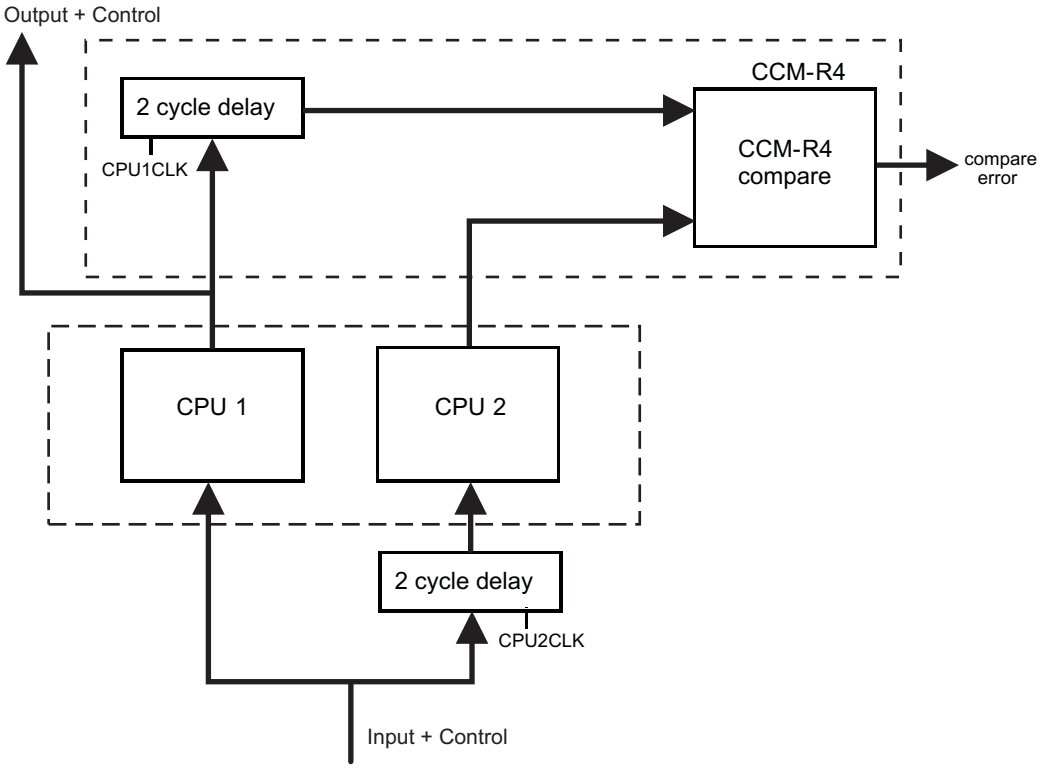

Figure 6-3. Dual Core Implementation

To avoid an erroneous CCM-R4 compare error, the application software must initialize the registers of both CPUs before the registers are used, including function calls where the register values are pushed onto the stack.

6.5.6 CPU Self-Test

The CPU STC (Self-Test Controller) is used to test the two Cortex-R4F CPU Cores using the Deterministic Logic BIST Controller as the test engine.

The main features of the self-test controller are:

- Ability to divide the complete test run into independent test intervals
- Capable of running the complete test as well as running few intervals at a time
- Ability to continue from the last executed interval (test set) as well as ability to restart from the beginning (First test set)
- Complete isolation of the self-tested CPU core from rest of the system during the self-test run
- Ability to capture the Failure interval number
- Timeout counter for the CPU self-test run as a fail-safe feature

Copyright © 2012–2015, Texas Instruments Incorporated

6.5.6.1 Application Sequence for CPU Self-Test

1. Configure clock domain frequencies.
2. Select number of test intervals to be run.
3. Configure the timeout period for the self-test run.
4. Enable self-test.
5. Wait for CPU reset.
6. In the reset handler, read CPU self-test status to identify any failures.
7. Retrieve CPU state if required.

For more information see TMS570LS12x/11x Technical Reference Manual (SPNU515).

6.5.6.2 CPU Self-Test Clock Configuration

The maximum clock rate for the self-test is 90MHz. The STCCLK is divided down from the CPU clock. This divider is configured by the STCCLKDIV register at address 0xFFFFE108.

For more information see TMS570LS12x/11x Technical Reference Manual (SPNU515).

6.5.6.3 CPU Self-Test Coverage

Table 6-7 shows CPU test coverage achieved for each self-test interval. It also lists the cumulative test cycles. The test time can be calculated by multiplying the number of test cycles with the STC clock period.

Table 6-7. CPU Self-Test Coverage

INTERVALS	TEST COVERAGE, %	TEST CYCLES
0	0	0
1	62.13	1365
2	70.09	2730
3	74.49	4095
4	77.28	5460
5	79.28	6825
6	80.90	8190
7	82.02	9555
8	83.10	10920
9	84.08	12285
10	84.87	13650
11	85.59	15015
12	86.11	16380
13	86.67	17745
14	87.16	19110
15	87.61	20475
16	87.98	21840
17	88.38	23205
18	88.69	24570
19	88.98	25935
20	89.28	27300
21	89.50	28665
22	89.76	30030
23	90.01	31395
24	90.21	32760

Copyright © 2012–2015, Texas Instruments Incorporated

6.6 Clocks

6.6.1 Clock Sources

The table below lists the available clock sources on the device. Each of the clock sources can be enabled or disabled using the CSDISx registers in the system module. The clock source number in the table corresponds to the control bit in the CSDISx register for that clock source.

The table also shows the default state of each clock source.

Table 6-8. Available Clock Sources

Clock Source #	Name	Description	Default State
0	OSCIN	Main Oscillator	Enabled
1	PLL1	Output From PLL1	Disabled
2	Reserved	Reserved	Disabled
3	EXTCLKIN1	External Clock Input #1	Disabled
4	LFLPO	Low Frequency Output of Internal Reference Oscillator	Enabled
5	HFLPO	High Frequency Output of Internal Reference Oscillator	Enabled
6	PLL2	Output From PLL2	Disabled
7	EXTCLKIN2	External Clock Input #2	Disabled

6.6.1.1 Main Oscillator

The oscillator is enabled by connecting the appropriate fundamental resonator/crystal and load capacitors across the external OSCIN and OSCOUT pins as shown in Figure 6-4. The oscillator is a single stage inverter held in bias by an integrated bias resistor. This resistor is disabled during leakage test measurement and low power modes.

TI strongly encourages each customer to submit samples of the device to the resonator/crystal vendors for validation. The vendors are equipped to determine what load capacitors will best tune their resonator/crystal to the microcontroller device for optimum start-up and operation over temperature/voltage extremes.

An external oscillator source can be used by connecting a 3.3 V clock signal to the OSCIN pin and leaving the OSCOUT pin unconnected (open) as shown in the figure below.

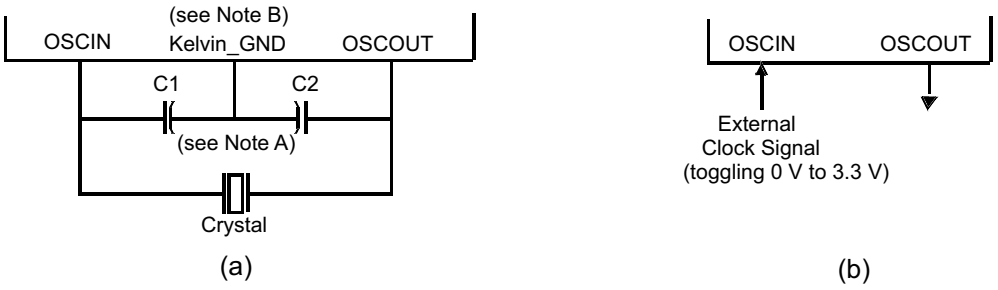

Note A: The values of C1 and C2 should be provided by the resonator/crystal vendor.
Note B: Kelvin_GND should not be connected to any other GND.

Figure 6-4. Recommended Crystal/Clock Connection

Copyright © 2012–2015, Texas Instruments Incorporated

6.6.1.1.1 Timing Requirements for Main Oscillator

Table 6-9. Timing Requirements for Main Oscillator

Parameter		MIN	Type	MAX	Unit
tc(OSC)	Cycle time, OSCIN (when using a sine-wave input)	50		200	ns
tc(OSC_SQR)	Cycle time, OSCIN, (when input to the OSCIN is a square wave)	50		200	ns
tw(OSCIL)	Pulse duration, OSCIN low (when input to the OSCIN is a square wave)	15			ns
tw(OSCIH)	Pulse duration, OSCIN high (when input to the OSCIN is a square wave)	15			ns

6.6.1.2 Low Power Oscillator

The Low Power Oscillator (LPO) is comprised of two oscillators — HF LPO and LF LPO, in a single macro.

6.6.1.2.1 Features

The main features of the LPO are:

- Supplies a clock at extremely low power for power-saving modes. This is connected as clock source # 4 of the Global Clock Module.
- Supplies a high-frequency clock for non-timing-critical systems. This is connected as clock source # 5 of the Global Clock Module.
- Provides a comparison clock for the crystal oscillator failure detection circuit.

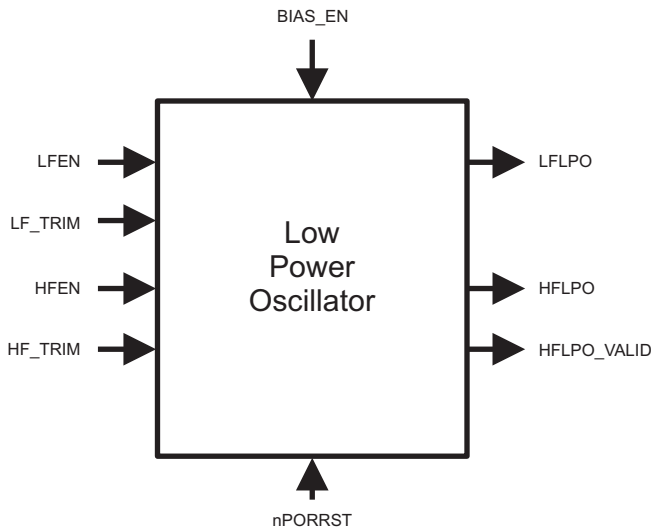

Figure 6-5. LPO Block Diagram

Figure 6-5 shows a block diagram of the internal reference oscillator. This is a low power oscillator (LPO) and provides two clock sources: one nominally 80KHz and one nominally 10MHz.

Table 6-10. LPO Specifications

Parameter		MIN	Typical	MAX	Unit
Clock Detection	oscillator fail frequency - lower threshold, using untrimmed LPO output	1.375	2.4	4.875	MHz
	oscillator fail frequency - higher threshold, using untrimmed LPO output	22	38.4	78	MHz
LPO - HF oscillator (f_{HFLPO})	untrimmed frequency	5.5	9	19.5	MHz
	trimmed frequency	8	9.6	11	MHz
	startup time from STANDBY (LPO BIAS_EN High for at least 900µs)			10	µs
	cold startup time			900	µs
LPO - LF oscillator	untrimmed frequency	36	85	180	kHz
	startup time from STANDBY (LPO BIAS_EN High for at least 900µs)			100	µs
	cold startup time			2000	µs

Copyright © 2012–2015, Texas Instruments Incorporated

6.6.1.3 Phase Locked Loop (PLL) Clock Modules

The PLL is used to multiply the input frequency to some higher frequency.

The main features of the PLL are:

- Frequency modulation can be optionally superimposed on the synthesized frequency of PLL1. The frequency modulation capability of PLL2 is permanently disabled.
- Configurable frequency multipliers and dividers.
- Built-in PLL Slip monitoring circuit.
- Option to reset the device on a PLL slip detection.

6.6.1.3.1 Block Diagram

Figure 6-6 shows a high-level block diagram of the two PLL macros on this microcontroller. PLLCTL1 and PLLCTL2 are used to configure the multiplier and dividers for the PLL1. PLLCTL3 is used to configure the multiplier and dividers for PLL2.

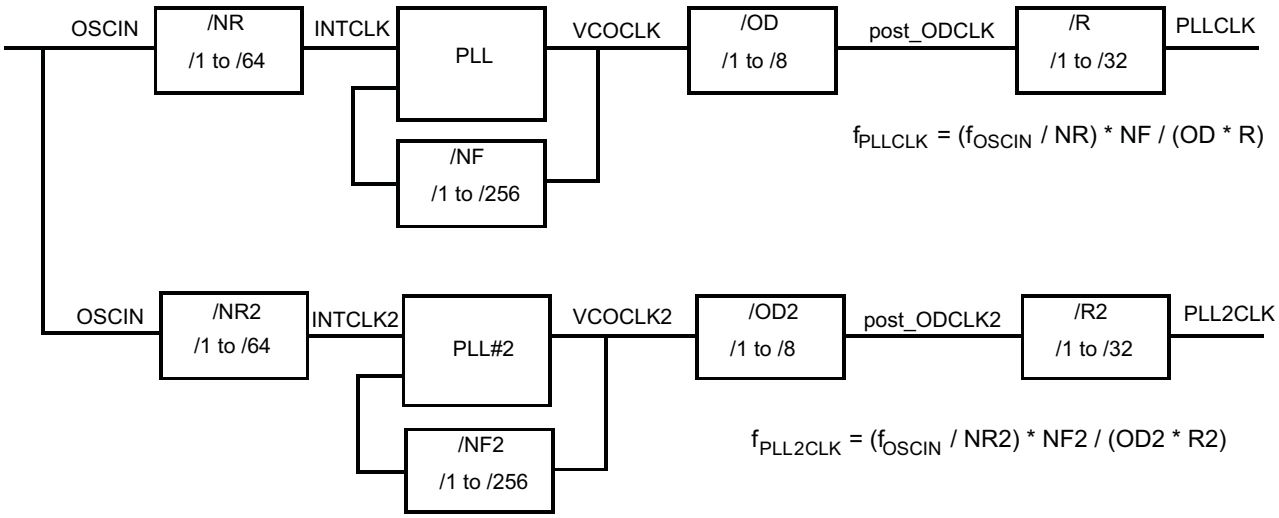

Figure 6-6. PLLx Block Diagram

6.6.1.3.2 PLL Timing Specifications

Table 6-11. PLL Timing Specifications

PARAMETER		MIN	MAX	UNIT
f_{INTCLK}	PLL1 Reference Clock frequency	1	$f_{(OSC_SQR)}$	MHz
f_{post_ODCLK}	Post-ODCLK – PLL1 Post-divider input clock frequency		400	MHz
f_{VCOCLK}	VCOCLK – PLL1 Output Divider (OD) input clock frequency	150	550	MHz
$f_{INTCLK2}$	PLL2 Reference Clock frequency	1	$f_{(OSC_SQR)}$	MHz
f_{post_ODCLK2}	Post-ODCLK – PLL2 Post-divider input clock frequency		400	MHz
$f_{VCOCLK2}$	VCOCLK – PLL2 Output Divider (OD) input clock frequency	150	550	MHz

6.6.1.4 External Clock Inputs

The device supports up to two external clock inputs. This clock input must be a square wave input. The electrical and timing requirements for these clock inputs are specified below. The external clock sources are not checked for validity. They are assumed valid when enabled.

Table 6-12. External Clock Timing and Electrical Specifications

Parameter	Description	Min	Max	Unit
$f_{EXTCLKx}$	External clock input frequency		80	MHz
$t_{w(EXTCLKIN)H}$	EXTCLK high-pulse duration	6		ns
$t_{w(EXTCLKIN)L}$	EXTCLK low-pulse duration	6		ns
$v_{iL(EXTCLKIN)}$	Low-level input voltage	-0.3	0.8	V
$v_{iH(EXTCLKIN)}$	High-level input voltage	2	VCCIO + 0.3	V

6.6.2 Clock Domains

6.6.2.1 Clock Domain Descriptions

The table below lists the device clock domains and their default clock sources. The table also shows the system module control register that is used to select an available clock source for each clock domain.

Table 6-13. Clock Domain Descriptions

Clock Domain Name	Default Clock Source	Clock Source Selection Register	Description
HCLK	OSCIN	GHVSRC	• Is disabled through the CDDISx registers bit 1 • Used for all system modules including DMA, ESM
GCLK	OSCIN	GHVSRC	• Always the same frequency as HCLK • In phase with HCLK • Is disabled separately from HCLK through the CDDISx registers bit 0 • Can be divided by 1up to 8 when running CPU self-test (LBIST) using the CLKDIV field of the STCCLKDIV register at address 0xFFFFE108
GCLK2	OSCIN	GHVSRC	• Always the same frequency as GCLK • 2 cycles delayed from GCLK • Is disabled along with GCLK • Gets divided by the same divider setting as that for GCLK when running CPU self-test (LBIST)
VCLK	OSCIN	GHVSRC	• Divided down from HCLK • Can be HCLK/1, HCLK/2, ... or HCLK/16 • Is disabled separately from HCLK through the CDDISx registers bit 2
VCLK2	OSCIN	GHVSRC	• Divided down from HCLK • Can be HCLK/1, HCLK/2, ... or HCLK/16 • Frequency must be an integer multiple of VCLK frequency • Is disabled separately from HCLK through the CDDISx registers bit 3
VCLK3	OSCIN	GHVSRC	• Divided down from HCLK • Can be HCLK/1, HCLK/2, ... or HCLK/16 • Is disabled separately from HCLK through the CDDISx registers bit 8
VCLK4	OSCIN	GHVSRC	• Divided down from HCLK • Can be HCLK/1, HCLK/2, ... or HCLK/16 • Is disabled separately from HCLK through the CDDISx registers bit 9

Copyright © 2012–2015, Texas Instruments Incorporated

Table 6-13. Clock Domain Descriptions (continued)

Clock Domain Name	Default Clock Source	Clock Source Selection Register	Description
VCLKA1	VCLK	VCLKASRC	• Defaults to VCLK as the source • Is disabled through the CDDISx registers bit 4
VCLKA2	VCLK	VCLKASRC	• Defaults to VCLK as the source • Is disabled through the CDDISx registers bit 5
VCLKA4_S	VCLK	VCLKACON1	• Defaults to VCLK as the source • Frequency can be as fast as HCLK frequency • Is disabled through the CDDISx registers bit 11
VCLKA4_DIVR	VCLK	VCLKACON1	• Divided down from the VCLKA4_S using the VCLKA4R field of the VCLKACON1 register at address 0xFFFFE140 • Frequency can be VCLKA4_S/1, VCLKA4_S/2, ..., or VCLKA4_S/8 • Default frequency is VCLKA4_S/2 • Is disabled separately through the VCLKACON1 register VCLKA4_DIV_CDDIS bit only if the VCLKA4_S clock is not disabled
RTICLK	VCLK	RCLKSRC	• Defaults to VCLK as the source • If a clock source other than VCLK is selected for RTICLK, then the RTICLK frequency must be less than or equal to VCLK/3 – Application can ensure this by programming the RTI1DIV field of the RCLKSRC register, if necessary • Is disabled through the CDDISx registers bit 6

6.6.2.2 Mapping of Clock Domains to Device Modules

Each clock domain has a dedicated functionality as shown in the figures below.

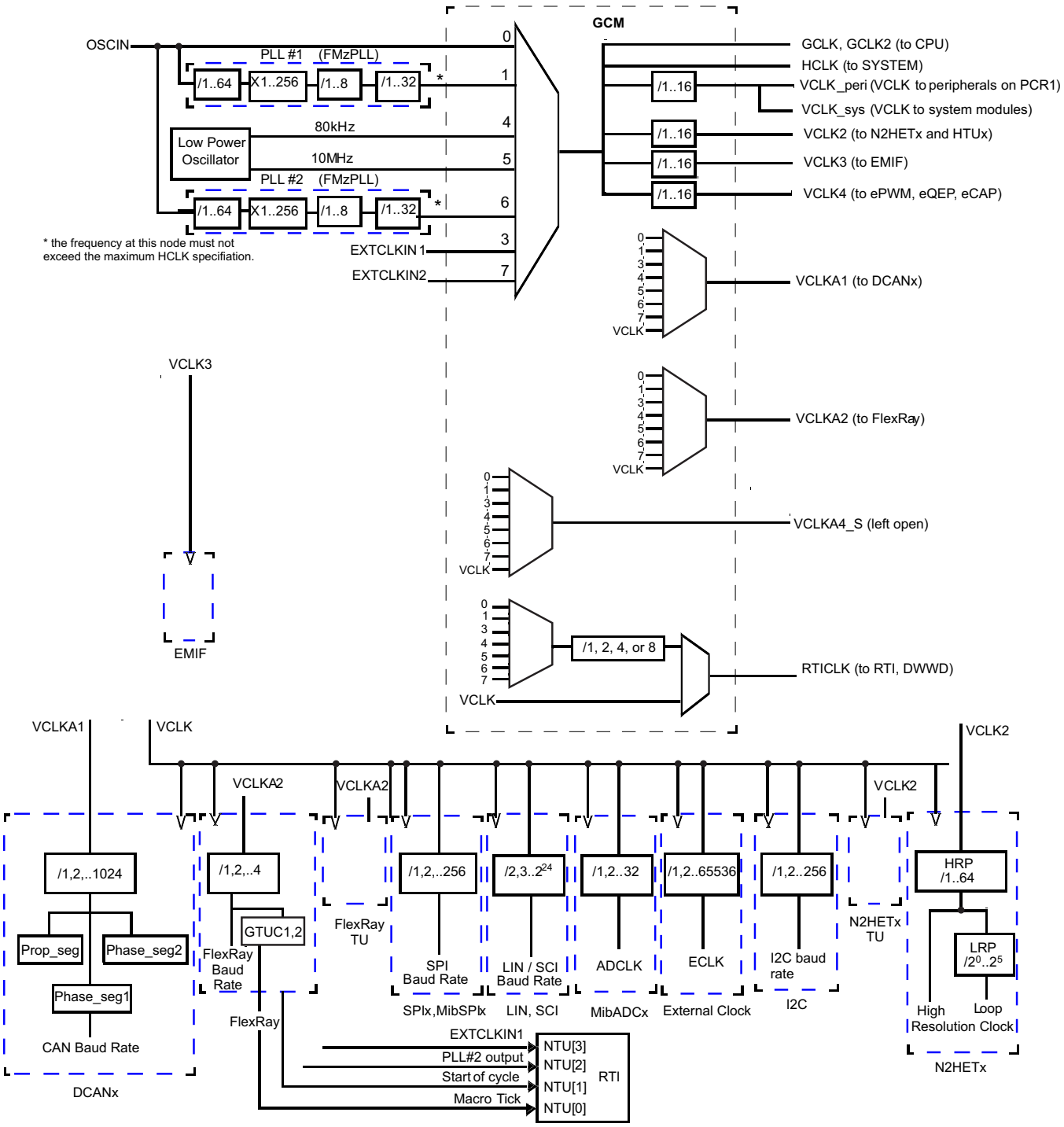

Figure 6-7. Device Clock Domains

Copyright © 2012–2015, Texas Instruments Incorporated

6.6.3 Clock Test Mode

The platform architecture defines a special mode that allows various clock signals to be brought out on to the ECLK pin and N2HET1[12] device outputs. This mode is called the Clock Test mode. It is very useful for debugging purposes and can be configured through the CLKTEST register in the system module.

Table 6-14. Clock Test Mode Options

SEL_ECP_PIN = CLKTEST[3-0]	SIGNAL ON ECLK		SEL_GIO_PIN = CLKTEST[11-8]	SIGNAL ON N2HET1[12]
0000	Oscillator		0000	Oscillator Valid Status
0001	Main PLL free-running clock output		0001	Main PLL Valid status
0010	Reserved		0010	Reserved
0011	EXTCLKIN1		0011	Reserved
0100	LFLPO		0100	Reserved
0101	HFLPO		0101	HFLPO Valid status
0110	Secondary PLL free-running clock output		0110	Secondary PLL Valid Status
0111	EXTCLKIN2		0111	Reserved
1000	GCLK		1000	LFLPO
1001	RTI Base		1001	Oscillator Valid status
1010	Reserved		1010	Oscillator Valid status
1011	VCLKA1		1011	Oscillator Valid status
1100	VCLKA2		1100	Oscillator Valid status
1101	Reserved		1101	Reserved
1110	VCLKA4_DIVR		1110	VCLKA4_S
1111	Reserved		1111	Oscillator Valid status

6.7 Clock Monitoring

The LPO Clock Detect (LPOCLKDET) module consists of a clock monitor (CLKDET) and an internal low power oscillator (LPO).

The LPO provides two different clock sources – a low frequency (LFLPO) and a high frequency (HFLPO).

The CLKDET is a supervisor circuit for an externally supplied clock signal (OSCIN). In case the OSCIN frequency falls out of a frequency window, the CLKDET flags this condition in the global status register (GLBSTAT bit 0: OSC FAIL) and switches all clock domains sourced by OSCIN to the HFLPO clock (limp mode clock).

The valid OSCIN frequency range is defined as: $f_{HFLPO} / 4 < f_{OSCIN} < f_{HFLPO} * 4$.

6.7.1 Clock Monitor Timings

For more information on LPO and Clock detection, refer to Table 6-10.

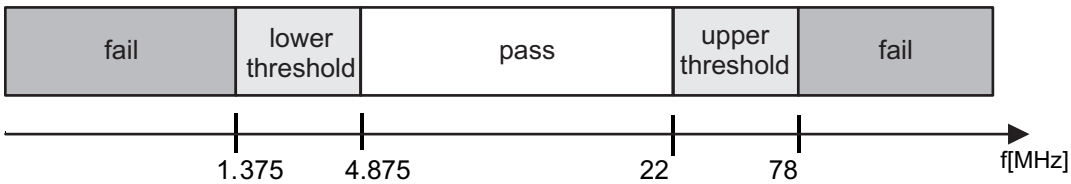

Figure 6-8. LPO and Clock Detection, Untrimmed HFLPO

6.7.2 External Clock (ECLK) Output Functionality

The ECLK pin can be configured to output a pre-scaled clock signal indicative of an internal device clock. This output can be externally monitored as a safety diagnostic.

6.7.3 Dual Clock Comparators

The Dual Clock Comparator (DCC) module determines the accuracy of selectable clock sources by counting the pulses of two independent clock sources (counter 0 and counter 1). If one clock is out of spec, an error signal is generated. For example, the DCC1 can be configured to use HFLPO as the reference clock (for counter 0) and VCLK as the "clock under test" (for counter 1). This configuration allows the DCC1 to monitor the PLL output clock when VCLK is using the PLL output as its source.

An additional use of this module is to measure the frequency of a selectable clock source, using the input clock as a reference, by counting the pulses of two independent clock sources. Counter 0 generates a fixed-width counting window after a preprogrammed number of pulses. Counter 1 generates a fixed-width pulse (1 cycle) after a pre-programmed number of pulses. This pulse sets as an error signal if counter 1 does not reach 0 within the counting window generated by counter 0.

6.7.3.1 Features

- Takes two different clock sources as input to two independent counter blocks.
- One of the clock sources is the known-good, or reference clock; the second clock source is the "clock under test."
- Each counter block is programmable with initial, or seed values.
- The counter blocks start counting down from their seed values at the same time; a mismatch from the expected frequency for the clock under test generates an error signal which is used to interrupt the CPU.

6.7.3.2 Mapping of DCC Clock Source Inputs

Table 6-15. DCC1 Counter 0 Clock Sources

CLOCK SOURCE [3:0]	CLOCK NAME
others	oscillator (OSCIN)
0x5	high frequency LPO

Copyright © 2012–2015, Texas Instruments Incorporated

Table 6-15. DCC1 Counter 0 Clock Sources (continued)

CLOCK SOURCE [3:0]	CLOCK NAME
0xA	test clock (TCK)

Table 6-16. DCC1 Counter 1 Clock Sources

KEY [3:0]	CLOCK SOURCE [3:0]	CLOCK NAME
others	-	N2HET1[31]
0xA	0x0	Main PLL free-running clock output
	0x1	PLL #2 free-running clock output
	0x2	low frequency LPO
	0x3	high frequency LPO
	0x4	reserved
	0x5	EXTCLKIN1
	0x6	EXTCLKIN2
	0x7	reserved
	0x8 - 0xF	VCLK

Table 6-17. DCC2 Counter 0 Clock Sources

CLOCK SOURCE [3:0]	CLOCK NAME
others	oscillator (OSCIN)
0xA	test clock (TCK)

Table 6-18. DCC2 Counter 1 Clock Sources

KEY [3:0]	CLOCK SOURCE [3:0]	CLOCK NAME
others	-	N2HET2[0]
0xA	00x0 - 0x7	Reserved
	0x8 - 0xF	VCLK

6.8 Glitch Filters

A glitch filter is present on the following signals.

Table 6-19. Glitch Filter Timing Specifications

Pin	Parameter		MIN	MAX	Unit
nPORRST	$t_{f(nPORRST)}$	Filter time nPORRST pin; pulses less than MIN will be filtered out, pulses greater than MAX will generate a reset[(1)]	475	2000	ns
nRST	$t_{f(nRST)}$	Filter time nRST pin; pulses less than MIN will be filtered out, pulses greater than MAX will generate a reset	475	2000	ns
TEST	$t_{f(TEST)}$	Filter time TEST pin; pulses less than MIN will be filtered out, pulses greater than MAX will pass through	475	2000	ns

(1) The glitch filter design on the nPORRST signal is designed such that no size pulse will reset any part of the microcontroller (flash pump, I/O pins, etc.) without also generating a valid reset signal to the CPU.

Copyright © 2012–2015, Texas Instruments Incorporated

6.9 Device Memory Map

6.9.1 Memory Map Diagram

The figure below shows the device memory map.

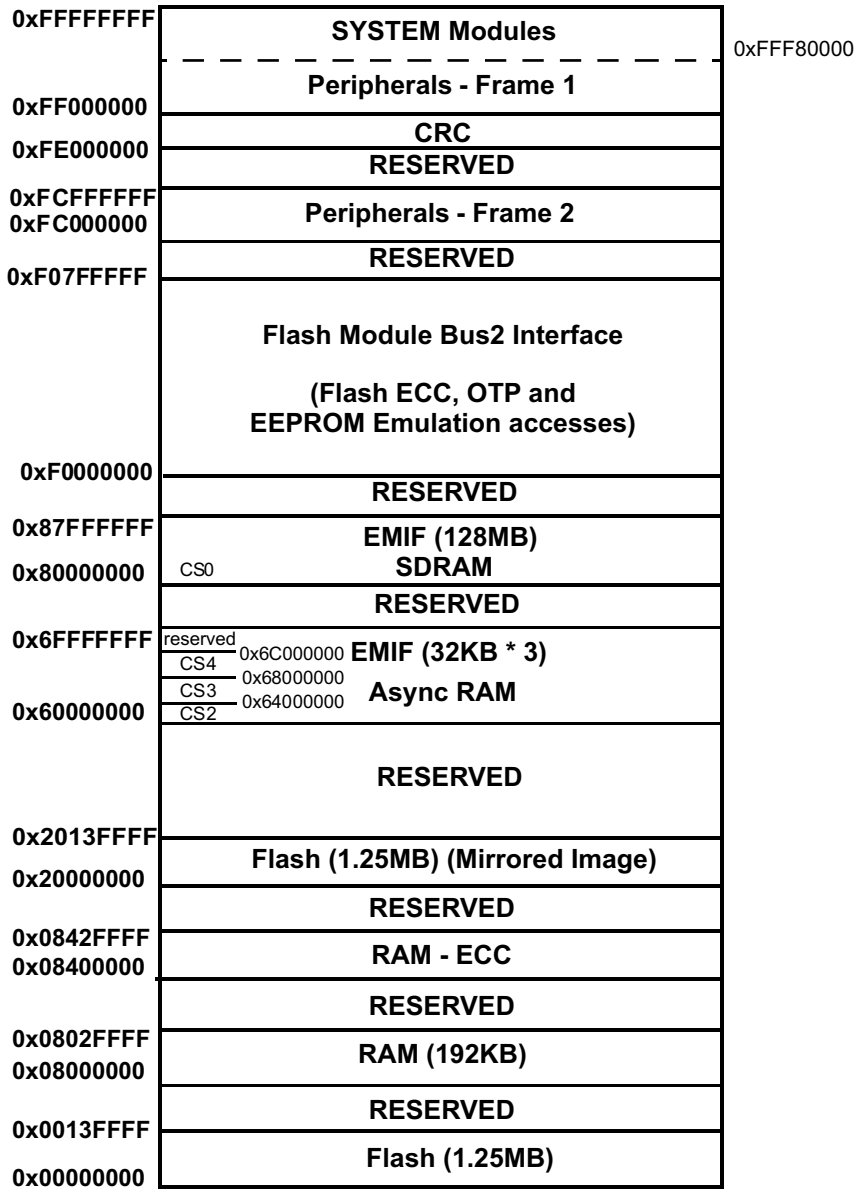

Figure 6-9. Memory Map

The Flash memory is mirrored to support ECC logic testing. The base address of the mirrored Flash image is 0x2000 0000.

6.9.2 Memory Map Table

Table 6-20. Device Memory Map

MODULE NAME	FRAME CHIP SELECT	FRAME ADDRESS RANGE		FRAME SIZE	ACTUAL SIZE	RESPNSE FOR ACCESS TO UNIMPLEMENTED LOCATIONS IN FRAME
		START	END			
Memories tightly coupled to the ARM Cortex-R4F CPU						
TCM Flash	CS0	0x0000_0000	0x00FF_FFFF	16MB	1.25MB	Abort
TCM RAM + RAM ECC	CSRAM0	0x0800_0000	0x0BFF_FFFF	64MB	192KB	
Mirrored Flash	Flash mirror frame	0x2000_0000	0x20FF_FFFF	16MB	1.25MB	
External Memory Accesses						
EMIF Chip Select 2 (asynchronous)	EMIF select 2	0x6000_0000	0x63FF_FFFF	64MB	32KB	Access to "Reserved" space will generate Abort
EMIF Chip Select 3 (asynchronous)	EMIF select 3	0x6400_0000	0x67FF_FFFF	64MB	32KB	
EMIF Chip Select 4 (asynchronous)	EMIF select 4	0x6800_0000	0x6BFF_FFFF	64MB	32KB	
EMIF Chip Select 0 (synchronous)	EMIF select 0	0x8000_0000	0x87FF_FFFF	128MB	128MB	
Flash Module Bus2 Interface						
Customer OTP, TCM Flash Banks		0xF000_0000	0xF000_1FFF	8KB	4KB	Abort
Customer OTP, Bank 7		0xF000_E000	0xF000_FFFF	8KB	2KB	
Customer OTP–ECC, TCM Flash Banks		0xF004_0000	0xF004_03FF	1KB	512B	
Customer OTP–ECC, Bank 7		0xF004_1C00	0xF004_1FFF	1KB	256B	
TI OTP, TCM Flash Banks		0xF008_0000	0xF008_1FFF	8KB	4KB	
TI OTP, Bank 7		0xF008_E000	0xF008_FFFF	8KB	2KB	
TI OTP–ECC, TCM Flash Banks		0xF00C_0000	0xF00C_03FF	1KB	512B	
TI OTP–ECC, Bank 7		0xF00C_1C00	0xF00C_1FFF	1KB	256B	
Bank 7 – ECC		0xF010_0000	0xF013_FFFF	256KB	8KB	
Bank 7		0xF020_0000	0xF03F_FFFF	2MB	64KB	
Flash Data Space ECC		0xF040_0000	0xF04F_FFFF	1MB	160KB	
EMIF slave interfaces						
EMIF Registers		0xFCFF_E800	0xFCFF_E8FF	256B	256B	Abort
SCR5: Enhanced Timer Peripherals						
ePWM1		0xFCF7_8C00	0xFCF7_8CFF	256B	256B	Abort
ePWM2		0xFCF7_8D00	0xFCF7_8DFF	256B	256B	Abort
ePWM3		0xFCF7_8E00	0xFCF7_8EFF	256B	256B	Abort
ePWM4		0xFCF7_8F00	0xFCF7_8FFF	256B	256B	Abort
ePWM5		0xFCF7_9000	0xFCF7_90FF	256B	256B	Abort
ePWM6		0xFCF7_9100	0xFCF7_91FF	256B	256B	Abort
ePWM7		0xFCF7_9200	0xFCF7_92FF	256B	256B	Abort
eCAP1		0xFCF7_9300	0xFCF7_93FF	256B	256B	Abort

Copyright © 2012–2015, Texas Instruments Incorporated

Table 6-20. Device Memory Map (continued)

MODULE NAME	FRAME CHIP SELECT	FRAME ADDRESS RANGE		FRAME SIZE	ACTUAL SIZE	RESPNSE FOR ACCESS TO UNIMPLEMENTED LOCATIONS IN FRAME
		START	END			
eCAP2		0xFCF7_9400	0xFCF7_94FF	256B	256B	Abort
eCAP3		0xFCF7_9500	0xFCF7_95FF	256B	256B	Abort
eCAP4		0xFCF7_9600	0xFCF7_96FF	256B	256B	Abort
eCAP5		0xFCF7_9700	0xFCF7_97FF	256B	256B	Abort
eCAP6		0xFCF7_9800	0xFCF7_98FF	256B	256B	Abort
eQEP1		0xFCF7_9900	0xFCF7_99FF	256B	256B	Abort
eQEP2		0xFCF7_9A00	0xFCF7_9AFF	256B	256B	Abort
Cyclic Redundancy Checker (CRC) Module Registers						
CRC	CRC frame	0xFE00_0000	0xFEFF_FFFF	16MB	512B	Accesses above 0x200 generate abort.
Peripheral Memories						
MIBSPI5 RAM	PCS[5]	0xFF0A_0000	0xFF0B_FFFF	128KB	2KB	Abort for accesses above 2KB
MIBSPI3 RAM	PCS[6]	0xFF0C_0000	0xFF0D_FFFF	128KB	2KB	Abort for accesses above 2KB
MIBSPI1 RAM	PCS[7]	0xFF0E_0000	0xFF0F_FFFF	128KB	2KB	Abort for accesses above 2KB
DCAN3 RAM	PCS[13]	0xFF1A_0000	0xFF1B_FFFF	128KB	2KB	Wrap around for accesses to unimplemented address offsets lower than 0x7FF. Abort generated for accesses beyond offset 0x800.
DCAN2 RAM	PCS[14]	0xFF1C_0000	0xFF1D_FFFF	128KB	2KB	Wrap around for accesses to unimplemented address offsets lower than 0x7FF. Abort generated for accesses beyond offset 0x800.
DCAN1 RAM	PCS[15]	0xFF1E_0000	0xFF1F_FFFF	128KB	2KB	Wrap around for accesses to unimplemented address offsets lower than 0x7FF. Abort generated for accesses beyond offset 0x800.
MIBADC2 RAM	PCS[29]	0xFF3A_0000	0xFF3B_FFFF	128KB	8KB	Wrap around for accesses to unimplemented address offsets lower than 0x1FFF. Abort generated for accesses beyond 0x1FFF.
MIBADC2 Look-Up Table					384B	Look-Up Table for ADC2 wrapper. Starts at address offset 0x2000 and ends at address offset 0x217F. Wrap around for accesses between offsets 0x0180 and 0x3FFF. Abort generated for accesses beyond offset 0x4000.
MIBADC1 RAM	PCS[31]	0xFF3E_0000	0xFF3F_FFFF	128KB	8KB	Wrap around for accesses to unimplemented address offsets lower than 0x1FFF. Abort generated for accesses beyond 0x1FFF.
MibADC1 Look-Up Table					384B	Look-Up Table for ADC1 wrapper. Starts at address offset 0x2000 and ends at address offset 0x217F. Wrap around for accesses between offsets 0x0180 and 0x3FFF. Abort generated for accesses beyond offset 0x4000.
N2HET2 RAM	PCS[34]	0xFF44_0000	0xFF45_FFFF	128KB	16KB	Wrap around for accesses to unimplemented address offsets lower than 0x3FFF. Abort generated for accesses beyond 0x3FFF.
N2HET1 RAM	PCS[35]	0xFF46_0000	0xFF47_FFFF	128KB	16KB	Wrap around for accesses to unimplemented address offsets lower than 0x3FFF. Abort generated for accesses beyond 0x3FFF.
HTU2 RAM	PCS[38]	0xFF4C_0000	0xFF4D_FFFF	128KB	1KB	Abort
HTU1 RAM	PCS[39]	0xFF4E_0000	0xFF4F_FFFF	128KB	1KB	Abort

Copyright © 2012–2015, Texas Instruments Incorporated

Table 6-20. Device Memory Map (continued)

MODULE NAME	FRAME CHIP SELECT	FRAME ADDRESS RANGE		FRAME SIZE	ACTUAL SIZE	RESPNSE FOR ACCESS TO UNIMPLEMENTED LOCATIONS IN FRAME
		START	END			
FlexRay TU RAM	PCS[40]	0xFF50_0000	0xFF51_FFFF	128KB	1KB	Abort
Debug Components						
CoreSight Debug ROM	CSCS0	0xFFA0_0000	0xFFA0_0FFF	4KB	4KB	Reads return zeros, writes have no effect
Cortex-R4F Debug	CSCS1	0xFFA0_1000	0xFFA0_1FFF	4KB	4KB	Reads return zeros, writes have no effect
POM	CSCS4	0xFFA0_4000	0xFFA0_4FFF	4KB	4KB	Abort
Peripheral Control Registers						
FTU	PS[23]	0xFFF7_A000	0xFFF7_A1FF	512B	512B	Reads return zeros, writes have no effect
HTU1	PS[22]	0xFFF7_A400	0xFFF7_A4FF	256B	256B	Reads return zeros, writes have no effect
HTU2	PS[22]	0xFFF7_A500	0xFFF7_A5FF	256B	256B	Reads return zeros, writes have no effect
N2HET1	PS[17]	0xFFF7_B800	0xFFF7_B8FF	256B	256B	Reads return zeros, writes have no effect
N2HET2	PS[17]	0xFFF7_B900	0xFFF7_B9FF	256B	256B	Reads return zeros, writes have no effect
GIO	PS[16]	0xFFF7_BC00	0xFFF7_BDFF	512B	256B	Reads return zeros, writes have no effect
MIBADC1	PS[15]	0xFFF7_C000	0xFFF7_C1FF	512B	512B	Reads return zeros, writes have no effect
MIBADC2	PS[15]	0xFFF7_C200	0xFFF7_C3FF	512B	512B	Reads return zeros, writes have no effect
FlexRay	PS[12]+PS[13]	0xFFF7_C800	0xFFF7_CFFF	2KB	2KB	Reads return zeros, writes have no effect
I2C	PS[10]	0xFFF7_D400	0xFFF7_D4FF	256B	256B	Reads return zeros, writes have no effect
DCAN1	PS[8]	0xFFF7_DC00	0xFFF7_DDFF	512B	512B	Reads return zeros, writes have no effect
DCAN2	PS[8]	0xFFF7_DE00	0xFFF7_DFFF	512B	512B	Reads return zeros, writes have no effect
DCAN3	PS[7]	0xFFF7_E000	0xFFF7_E1FF	512B	512B	Reads return zeros, writes have no effect
LIN	PS[6]	0xFFF7_E400	0xFFF7_E4FF	256B	256B	Reads return zeros, writes have no effect
SCI	PS[6]	0xFFF7_E500	0xFFF7_E5FF	256B	256B	Reads return zeros, writes have no effect
MibSPI1	PS[2]	0xFFF7_F400	0xFFF7_F5FF	512B	512B	Reads return zeros, writes have no effect
SPI2	PS[2]	0xFFF7_F600	0xFFF7_F7FF	512B	512B	Reads return zeros, writes have no effect
MibSPI3	PS[1]	0xFFF7_F800	0xFFF7_F9FF	512B	512B	Reads return zeros, writes have no effect
SPI4	PS[1]	0xFFF7_FA00	0xFFF7_FBFF	512B	512B	Reads return zeros, writes have no effect
MibSPI5	PS[0]	0xFFF7_FC00	0xFFF7_FDFF	512B	512B	Reads return zeros, writes have no effect
System Modules Control Registers and Memories						
DMA RAM	PPCS0	0xFFF8_0000	0xFFF8_0FFF	4KB	4KB	Abort
VIM RAM	PPCS2	0xFFF8_2000	0xFFF8_2FFF	4KB	1KB	Wrap around for accesses to unimplemented address offsets between 1KB and 4KB.

Copyright © 2012–2015, Texas Instruments Incorporated

Table 6-20. Device Memory Map (continued)

MODULE NAME	FRAME CHIP SELECT	FRAME ADDRESS RANGE		FRAME SIZE	ACTUAL SIZE	RESPNSE FOR ACCESS TO UNIMPLEMENTED LOCATIONS IN FRAME
		START	END			
Flash Module	PPCS7	0xFFF8_7000	0xFFF8_7FFF	4KB	4KB	Abort
eFuse Controller	PPCS12	0xFFF8_C000	0xFFF8_CFFF	4KB	4KB	Abort
Power Management Module (PMM)	PPSE0	0xFFFF_0000	0xFFFF_01FF	512B	512B	Abort
PCR registers	PPS0	0xFFFF_E000	0xFFFF_E0FF	256B	256B	Reads return zeros, writes have no effect
System Module - Frame 2 (see SPNU515)	PPS0	0xFFFF_E100	0xFFFF_E1FF	256B	256B	Reads return zeros, writes have no effect
PBIST	PPS1	0xFFFF_E400	0xFFFF_E5FF	512B	512B	Reads return zeros, writes have no effect
STC	PPS1	0xFFFF_E600	0xFFFF_E6FF	256B	256B	Generates address error interrupt, if enabled
IOMM Multiplexing Control Module	PPS2	0xFFFF_EA00	0xFFFF_EBFF	512B	512B	Reads return zeros, writes have no effect
DCC1	PPS3	0xFFFF_EC00	0xFFFF_ECFF	256B	256B	Reads return zeros, writes have no effect
DMA	PPS4	0xFFFF_F000	0xFFFF_F3FF	1KB	1KB	Reads return zeros, writes have no effect
DCC2	PPS5	0xFFFF_F400	0xFFFF_F4FF	256B	256B	Reads return zeros, writes have no effect
ESM	PPS5	0xFFFF_F500	0xFFFF_F5FF	256B	256B	Reads return zeros, writes have no effect
CCMR4	PPS5	0xFFFF_F600	0xFFFF_F6FF	256B	256B	Reads return zeros, writes have no effect
RAM ECC even	PPS6	0xFFFF_F800	0xFFFF_F8FF	256B	256B	Reads return zeros, writes have no effect
RAM ECC odd	PPS6	0xFFFF_F900	0xFFFF_F9FF	256B	256B	Reads return zeros, writes have no effect
RTI + DWWD	PPS7	0xFFFF_FC00	0xFFFF_FCFF	256B	256B	Reads return zeros, writes have no effect
VIM Parity	PPS7	0xFFFF_FD00	0xFFFF_FDFF	256B	256B	Reads return zeros, writes have no effect
VIM	PPS7	0xFFFF_FE00	0xFFFF_FEFF	256B	256B	Reads return zeros, writes have no effect
System Module - Frame 1 (see SPNU515)	PPS7	0xFFFF_FF00	0xFFFF_FFFF	256B	256B	Reads return zeros, writes have no effect

6.9.3 Special Consideration for CPU Access Errors Resulting in Imprecise Aborts

Any CPU write access to a Normal or Device type memory, which generates a fault, will generate an imprecise abort. The imprecise abort exception is disabled by default and must be enabled for the CPU to handle this exception. The imprecise abort handling is enabled by clearing the "A" bit in the CPU's program status register (CPSR).

6.9.4 Master/Slave Access Privileges

The table below lists the access permissions for each bus master on the device. A bus master is a module that can initiate a read or a write transaction on the device.

Each slave module on the main interconnect is listed in the table. A "Yes" indicates that the module listed in the "MASTERS" column can access that slave module.

Table 6-21. Master / Slave Access Matrix

MASTERS	ACCESS MODE	SLAVES ON MAIN SCR				
		Flash Module Bus2 Interface: OTP, ECC, Bank 7	Non-CPU Accesses to Program Flash and CPU Data RAM	CRC	EMIF Slave Interface	Peripheral Control Registers, All Peripheral Memories, And All System Module Control Registers And Memories
CPU READ	User/Privilege	Yes	Yes	Yes	Yes	Yes
CPU WRITE	User/Privilege	**No**	Yes	Yes	Yes	Yes
DMA	User	Yes	Yes	Yes	Yes	Yes
POM	User	Yes	Yes	Yes	Yes	Yes
DAP	Privilege	Yes	Yes	Yes	Yes	Yes
HTU1	Privilege	**No**	Yes	Yes	Yes	Yes
HTU2	Privilege	**No**	Yes	Yes	Yes	Yes
FTU	User	**No**	Yes	Yes	Yes	Yes

6.9.5 Special Notes on Accesses to Certain Slaves

Write accesses to the Power Domain Management Module (PMM) control registers are limited to the CPU (master id = 1). The other masters can only read from these registers.

A debugger can also write to the PMM registers. The master-id check is disabled in debug mode.

The device contains dedicated logic to generate a bus error response on any access to a module that is in a power domain that has been turned OFF.

6.9.6 Parameter Overlay Module (POM) Considerations

- The POM can map onto up to 8MB of the internal or external memory space. The starting address and the size of the memory overlay are configurable through the POM control registers. Care must be taken to ensure that the overlay is mapped on to available memory.
- ECC must be disabled by software through CP15 in case POM overlay is enabled; otherwise ECC errors will be generated.
- POM overlay must not be enabled when the flash and internal RAM memories are swapped through the MEM SWAP field of the Bus Matrix Module Control Register 1 (BMMCR1).
- When POM is used to overlay the flash on to internal or external RAM, there is a bus contention possibility when another master accesses the TCM flash. This results in a system hang.
  - The POM implements a timeout feature to detect this exact scenario. The timeout needs to be enabled whenever POM overlay is enabled.
  - The timeout can be enabled by writing 1010 to the Enable TimeOut (ETO) field of the POM Global Control register (POMGLBCTRL, address = 0xFFA04000).
  - In case a read request by the POM cannot be completed within 32 HCLK cycles, the timeout (TO) flag is set in the POM Flag register (POMFLG, address = 0xFFA0400C). Also, an abort is generated to the CPU. This can be a prefetch abort for an instruction fetch or a data abort for a data fetch.
  - The prefetch- and data-abort handlers must be modified to check if the TO flag in the POM is set. If so, then the application can assume that the timeout is caused by a bus contention between the POM transaction and another master accessing the same memory region. The abort handlers need to clear the TO flag, so that any further aborts are not misinterpreted as having been caused due to a timeout from the POM.

Copyright © 2012–2015, Texas Instruments Incorporated

6.10 Flash Memory

6.10.1 Flash Memory Configuration

Flash Bank: A separate block of logic consisting of 1 to 16 sectors. Each flash bank normally has a customer-OTP and a TI-OTP area. These flash sectors share input/output buffers, data paths, sense amplifiers, and control logic.

Flash Sector: A contiguous region of flash memory which must be erased simultaneously due to physical construction constraints.

Flash Pump: A charge pump which generates all the voltages required for reading, programming, or erasing the flash banks.

Flash Module: Interface circuitry required between the host CPU and the flash banks and pump module.

Table 6-22. Flash Memory Banks and Sectors

Memory Arrays (or Banks)	Sector No.	Segment	Low Address	High Address
BANK0 (1.25MBytes)(1)	0	16K Bytes	0x0000_0000	0x0000_3FFF
	1	16K Bytes	0x0000_4000	0x0000_7FFF
	2	16K Bytes	0x0000_8000	0x0000_BFFF
	3	16K Bytes	0x0000_C000	0x0000_FFFF
	4	16K Bytes	0x0001_0000	0x0001_3FFF
	5	16K Bytes	0x0001_4000	0x0001_7FFF
	6	32K Bytes	0x0001_8000	0x0001_FFFF
	7	128K Bytes	0x0002_0000	0x0003_FFFF
	8	128K Bytes	0x0004_0000	0x0005_FFFF
	9	128K Bytes	0x0006_0000	0x0007_FFFF
	10	128K Bytes	0x0008_0000	0x0009_FFFF
	11	128K Bytes	0x000A_0000	0x000B_FFFF
	12	128K Bytes	0x000C_0000	0x000D_FFFF
	13	128K Bytes	0x000E_0000	0x000F_FFFF
	14	128K Bytes	0x0010_0000	0x0011_FFFF
	15	128K Bytes	0x0012_0000	0x0013_FFFF
BANK7 (64KBytes) for EEPROM emulation(2)(3)	0	16K Bytes	0xF020_0000	0xF020_3FFF
	1	16K Bytes	0xF020_4000	0xF020_7FFF
	2	16K Bytes	0xF020_8000	0xF020_BFFF
	3	16K Bytes	0xF020_C000	0xF020_FFFF

(1) The Flash banks are 144-bit wide bank with ECC support.
(2) The flash bank7 can be programmed while executing code from flash bank0.
(3) Code execution is not allowed from flash bank7.

6.10.2 Main Features of Flash Module

- Support for multiple flash banks for program and/or data storage
- Simultaneous read access on a bank while performing program or erase operation on any other bank
- Integrated state machines to automate flash erase and program operations
- Pipelined mode operation to improve instruction access interface bandwidth
- Support for Single Error Correction Double Error Detection (SECDED) block inside Cortex-R4F CPU
  - Error address is captured for host system debugging
- Support for a rich set of diagnostic features

6.10.3 ECC Protection for Flash Accesses

All accesses to the program flash memory are protected by Single Error Correction Double Error Detection (SECDED) logic embedded inside the CPU. The flash module provides 8 bits of ECC code for 64 bits of instructions or data fetched from the flash memory. The CPU calculates the expected ECC code based on the 64 bits received and compares it with the ECC code returned by the flash module. A single-bit error is corrected and flagged by the CPU, while a multibit error is only flagged. The CPU signals an ECC error through its Event bus. This signaling mechanism is not enabled by default and must be enabled by setting the "X" bit of the Performance Monitor Control Register, c9.

```
MRC p15,#0,r1,c9,c12,#0    ;Enabling Event monitor states
ORR r1, r1, #0x00000010
MCR p15,#0,r1,c9,c12,#0    ;Set 4th bit ('X') of PMNC register
MRC p15,#0,r1,c9,c12,#0
```

The application must also explicitly enable the CPU's ECC checking for accesses on the CPU's ATCM and BTCM interfaces. These are connected to the program flash and data RAM respectively. ECC checking for these interfaces can be done by setting the B1TCMPCEN, B0TCMPCEN and ATCMPCEN bits of the System Control coprocessor's Auxiliary Control Register, c1.

```
MRC p15, #0, r1, c1, c0, #1
ORR r1, r1, #0x0e000000        ;Enable ECC checking for ATCM and BTCMs
DMB
MCR p15, #0, r1, c1, c0, #1
```

6.10.4 Flash Access Speeds

For information on flash memory access speeds and the relevant wait states required, refer to Section 5.6.

Copyright © 2012–2015, Texas Instruments Incorporated

6.10.5 Program Flash

Table 6-23. Timing Requirements for Program Flash

Parameter			MIN	NOM	MAX	Unit
$t_{prog(144bit)}$	Wide Word (144bit) programming time			40	300	µs
$t_{prog(Total)}$	1.25MByte programming time (1)	-40°C to 125°C			13	s
		0°C to 60°C, for first 25 cycles		3.3	6.6	s
$t_{erase(bank0)}$	Sector/Bank erase time (2)	-40°C to 125°C		0.03	4	s
		0°C to 60°C, for first 25 cycles		16	100	ms
t_{wec}	Write/erase cycles with 15 year Data Retention requirement	-40°C to 125°C			1000	cycles

(1) This programming time includes overhead of state machine, but does not include data transfer time. The programming time assumes programming 144 bits at a time at the maximum specified operating frequency.
(2) During bank erase, the selected sectors are erased simultaneously. The time to erase the bank is specified as equal to the time to erase a sector.

6.10.6 Data Flash

Table 6-24. Timing Requirements for Data Flash

Parameter			MIN	NOM	MAX	Unit
$t_{prog(144bit)}$	Wide Word (144bit) programming time			40	300	µs
$t_{prog(Total)}$	EEPROM Emulation (bank 7) 64KByte programming time (1)	-40°C to 125°C			660	ms
		0°C to 60°C, for first 25 cycles		165	330	ms
$t_{erase(bank7)}$	EEPROM Emulation (bank 7) Sector/Bank erase time (2)	-40°C to 125°C		0.2	8	s
		0°C to 60°C, for first 25 cycles		14	100	ms
t_{wec}	Write/erase cycles with 15 year Data Retention requirement	-40°C to 125°C			100000	cycles

(1) This programming time includes overhead of state machine, but does not include data transfer time. The programming time assumes programming 144 bits at a time at the maximum specified operating frequency.
(2) During bank erase, the selected sectors are erased simultaneously. The time to erase the bank is specified as equal to the time to erase a sector.

6.11 Tightly Coupled RAM Interface Module

Figure 6-10 illustrates the connection of the Tightly Coupled RAM (TCRAM) to the Cortex-R4F CPU.

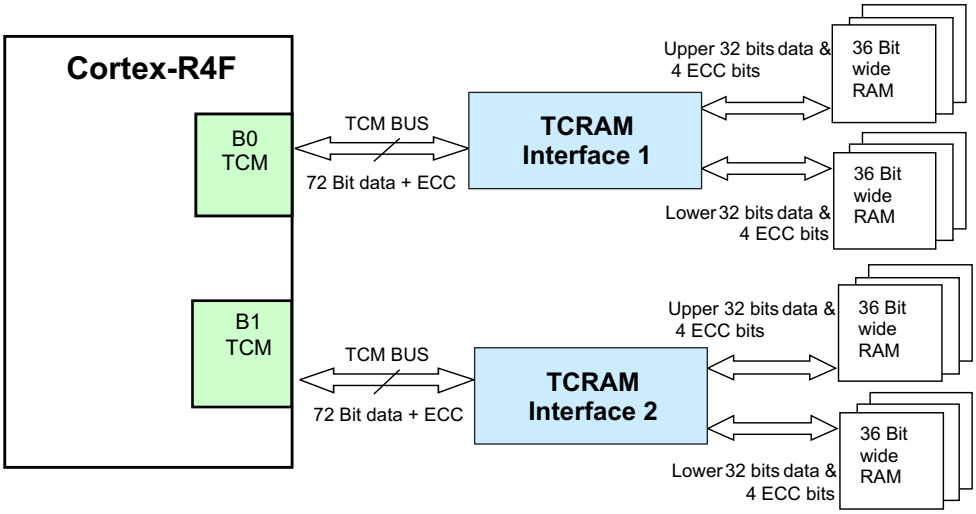

Figure 6-10. TCRAM Block Diagram

6.11.1 Features

The features of the Tightly Coupled RAM (TCRAM) Module are:

- Acts as slave to the BTCM interface of the Cortex-R4F CPU
- Supports the internal ECC scheme of the CPU by providing 64-bit data and 8-bit ECC code
- Monitors CPU Event Bus and generates single or multibit error interrupts
- Stores addresses for single and multibit errors
- Supports RAM trace module
- Provides CPU address bus integrity checking by supporting parity checking on the address bus
- Performs redundant address decoding for the RAM bank chip select and ECC select generation logic
- Provides enhanced safety for the RAM addressing by implementing two 36-bit-wide byte-interleaved RAM banks and generating independent RAM access control signals to the two banks
- Supports auto-initialization of the RAM banks along with the ECC bits

6.11.2 TCRAM ECC Support

The TCRAM interface passes on the ECC code for each data read by the Cortex-R4F CPU from the RAM. It also stores the contents of the CPU ECC port in the ECC RAM when the CPU does a write to the RAM. The TCRAM interface monitors the CPU event bus and provides registers for indicating single/multibit errors and also for identifying the address that caused the single or multibit error. The event signaling and the ECC checking for the RAM accesses must be enabled inside the CPU.

For more information see TMS570LS12x/11x Technical Reference Manual (SPNU515).

6.12 Parity Protection for Accesses to Peripheral RAMs

Accesses to some peripheral RAMs are protected by odd/even parity checking. During a read access the parity is calculated based on the data read from the peripheral RAM and compared with the good parity value stored in the parity RAM for that peripheral. If any word fails the parity check, the module generates a parity error signal that is mapped to the Error Signaling Module. The module also captures the peripheral RAM address that caused the parity error.

The parity protection for peripheral RAMs is not enabled by default and must be enabled by the application. Each individual peripheral contains control registers to enable the parity protection for accesses to its RAM.

Copyright © 2012–2015, Texas Instruments Incorporated

NOTE

The CPU read access gets the actual data from the peripheral. The application can choose to generate an interrupt whenever a peripheral RAM parity error is detected.

6.13 On-Chip SRAM Initialization and Testing

6.13.1 On-Chip SRAM Self-Test Using PBIST

6.13.1.1 Features

- Extensive instruction set to support various memory test algorithms
- ROM-based algorithms allow application to run TI production-level memory tests
- Independent testing of all on-chip SRAM

6.13.1.2 PBIST RAM Groups

Table 6-25. PBIST RAM Grouping

Memory	RAM Group	Test Clock	MEM Type	Test Pattern (Algorithm)			
				triple read slow read	triple read fast read	March 13N[1] two port (cycles)	March 13N[1] single port (cycles)
				ALGO MASK 0x1	ALGO MASK 0x2	ALGO MASK 0x4	ALGO MASK 0x8
PBIST_ROM	1	ROM CLK	ROM	24578	8194		
STC_ROM	2	ROM CLK	ROM	19586	6530		
DCAN1	3	VCLK	Dual Port			25200	
DCAN2	4	VCLK	Dual Port			25200	
DCAN3	5	VCLK	Dual Port			25200	
ESRAM1[2]	6	HCLK	Single Port				266280
MIBSPI1	7	VCLK	Dual Port			33440	
MIBSPI3	8	VCLK	Dual Port			33440	
MIBSPI5	9	VCLK	Dual Port			33440	
VIM	10	VCLK	Dual Port			12560	
MIBADC1	11	VCLK	Dual Port			4200	
DMA	12	HCLK	Dual Port			18960	
N2HET1	13	VCLK	Dual Port			31680	
HTU1	14	VCLK	Dual Port			6480	
FLEXRAY I/O buffer, Transient Buffer, FTU Control Packet	16[3]	VCLK	Dual Port			75400	
FLEXRAY Message RAM	17[4]	VCLK	Single Port				133160
MIBADC2	18	VCLK	Dual Port			4200	
N2HET2	19	VCLK	Dual Port			31680	
HTU2	20	VCLK	Dual Port			6480	
ESRAM5[5]	21	HCLK	Single Port				266280
ESRAM6[6]	22	HCLK	Single Port				266280

(1) There are several memory testing algorithms stored in the PBIST ROM. However, TI recommends the March13N algorithm for application testing.
(2) ESRAM1: Address 0x08000000 - 0x0800FFFF
(3) This RAM group includes the FTU control packet RAM, the FlexRay controller's I/O buffer, and the transient buffer.
(4) This RAM group inclludes the FlexRay controller's message RAM
(5) ESRAM5: Address 0x08010000 - 0x0801FFFF
(6) ESRAM6: Address 0x08020000 - 0x0802FFFF

Copyright © 2012–2015, Texas Instruments Incorporated

The PBIST ROM clock frequency is limited to 100MHz, if 100MHz < HCLK <= HCLKmax, or HCLK, if HCLK <= 100MHz.

The PBIST ROM clock is divided down from HCLK. The divider is selected by programming the ROM_DIV field of the Memory Self-Test Global Control Register (MSTGCR) at address 0xFFFFFF58.

6.13.2 On-Chip SRAM Auto Initialization

This microcontroller allows some of the on-chip memories to be initialized through the Memory Hardware Initialization mechanism in the System module. This hardware mechanism allows an application to program the memory arrays with error detection capability to a known state based on their error detection scheme (odd/even parity or ECC).

The MINITGCR register enables the memory initialization sequence, and the MSINENA register selects the memories that are to be initialized.

For more information on these registers see TMS570LS12x/11x Technical Reference Manual (SPNU515).

The mapping of the different on-chip memories to the specific bits of the MSINENA registers is shown in Table 6-26.

Table 6-26. Memory Initialization

CONNECTING MODULE	ADDRESS RANGE		MSINENA REGISTER BIT #
	BASE ADDRESS	ENDING ADDRESS	
RAM (PD#1)	0x08000000	0x0800FFFF	0 (1)
RAM (RAM_PD#1)	0x08010000	0x0801FFFF	0 (1)
RAM (RAM_PD#2)	0x08020000	0x0802FFFF	0 (1)
MIBSPI5 RAM	0xFF0A0000	0xFF0BFFFF	12 (2)
MIBSPI3 RAM	0xFF0C0000	0xFF0DFFFF	11 (2)
MIBSPI1 RAM	0xFF0E0000	0xFF0FFFFF	7 (2)
DCAN3 RAM	0xFF1A0000	0xFF1BFFFF	10
DCAN2 RAM	0xFF1C0000	0xFF1DFFFF	6
DCAN1 RAM	0xFF1E0000	0xFF1FFFFF	5
FlexRay RAM	RAM is not CPU-Addressable		n/a (3)
MIBADC2 RAM	0xFF3A0000	0xFF3BFFFF	14
MIBADC1 RAM	0xFF3E0000	0xFF3FFFFF	8
N2HET2 RAM	0xFF440000	0xFF45FFFF	15
N2HET1 RAM	0xFF460000	0xFF47FFFF	3
HTU2 RAM	0xFF4C0000	0xFF4DFFFF	16
HTU1 RAM	0xFF4E0000	0xFF4FFFFF	4
DMA RAM	0xFFF80000	0xFFF80FFF	1
VIM RAM	0xFFF82000	0xFFF82FFF	2
FlexRay TU (FTU) RAM	0xFF500000	0xFF51FFFF	13

(1) The TCM RAM interface module has separate control bits to select the RAM power domain that is to be auto-initialized.
(2) The MibSPIx modules perform an initialization of the transmit and receive RAMs as soon as the module is released from its local reset.. This is independent of whether the application chooses to initialize the MibSPIx RAMs using the system module auto-initialization method. The MibSPIx module must be first brought out of its local reset in order to use the system module auto-initialization method.
(3) Reserved only. The FlexRay RAM has its own initialization mechanism.

Copyright © 2012–2015, Texas Instruments Incorporated

6.14 External Memory Interface (EMIF)

6.14.1 Features

The EMIF includes many features to enhance the ease and flexibility of connecting to external asynchronous memories or SDRAM devices. The EMIF features includes support for:

- 3 addressable chip select for asynchronous memories of up to 32KB each
- 1 addressable chip select space for SDRAMs up to 128MB
- 8 or 16-bit data bus width
- Programmable cycle timings such as setup, strobe, and hold times as well as turnaround time
- Select strobe mode
- Extended Wait mode
- Data bus parking

6.14.2 Electrical and Timing Specifications

6.14.2.1 Asynchronous RAM

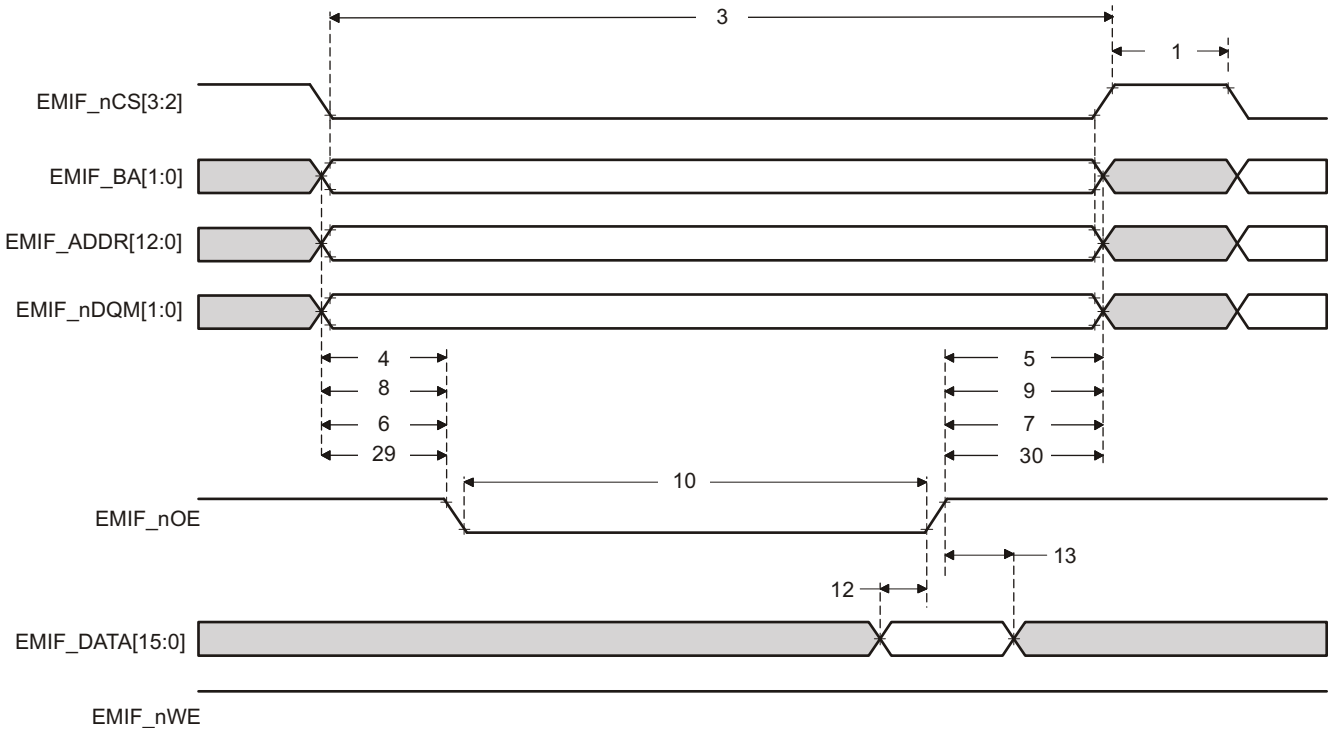

Figure 6-11. Asynchronous Memory Read Timing

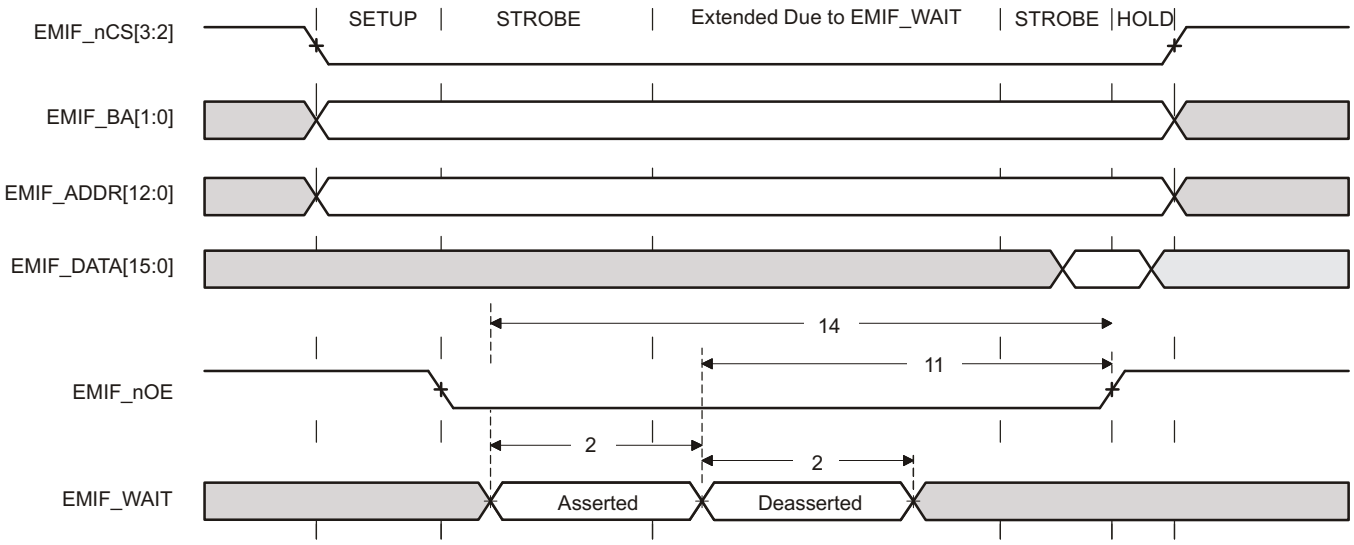

Figure 6-12. EMIFnWAIT Read Timing Requirements

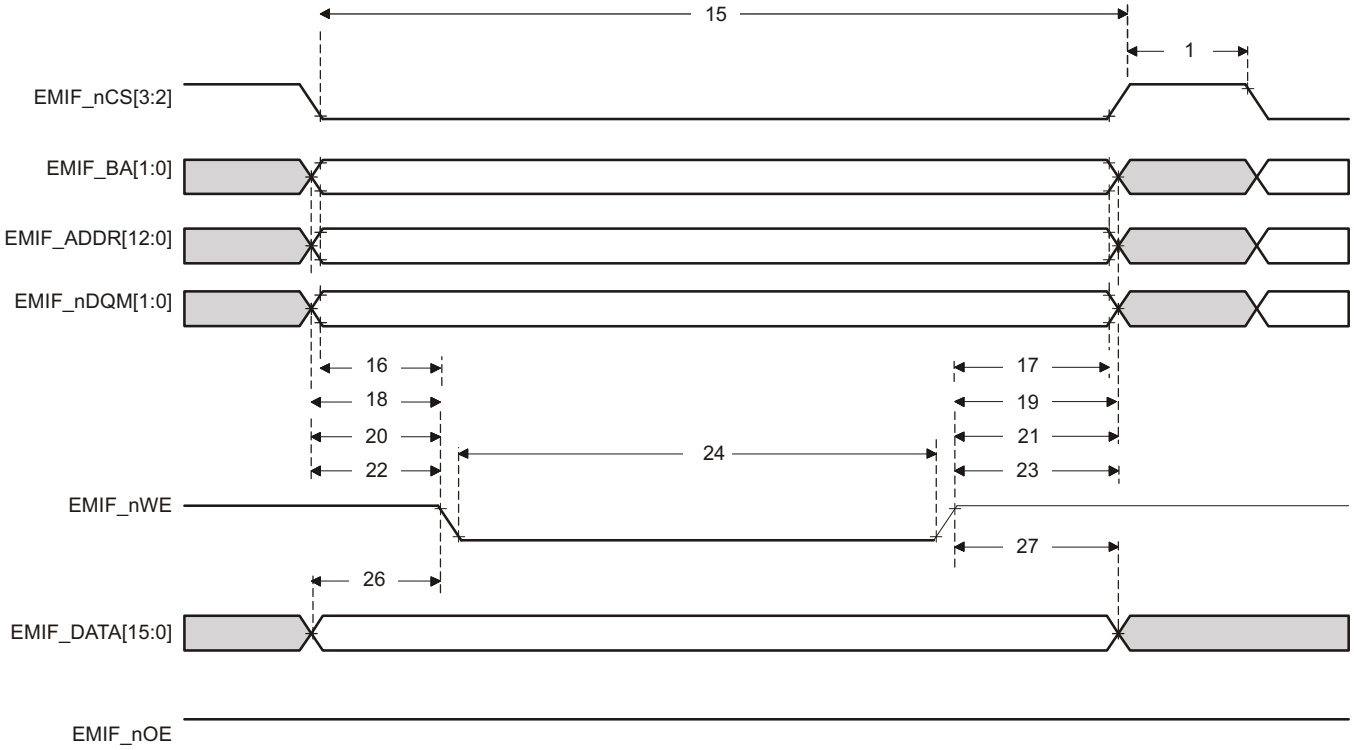

Figure 6-13. Asynchronous Memory Write Timing

Copyright © 2012–2015, Texas Instruments Incorporated

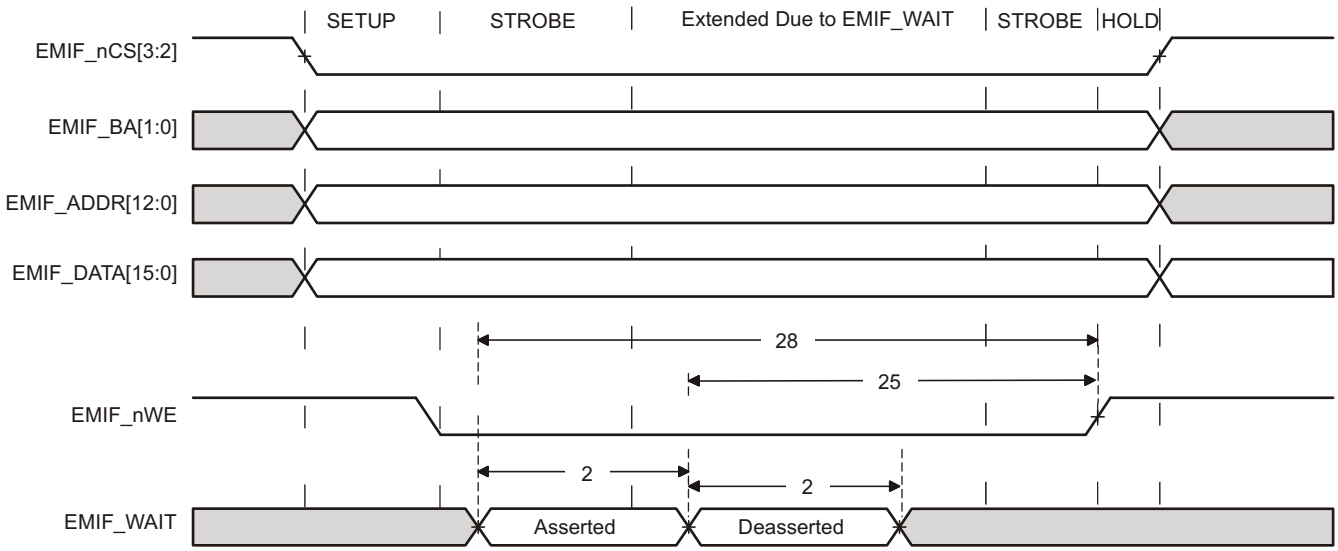

Figure 6-14. EMIFnWAIT Write Timing Requirements

Table 6-27. EMIF Asynchronous Memory Timing Requirements(1)

NO.			Value			Unit
			MIN	NOM	MAX	
Reads and Writes						
	E	EMIF clock period	11			ns
2	$t_{w(EM_WAIT)}$	Pulse duration, EMIF_nWAIT assertion and deassertion	2E			ns
Reads						
12	$t_{su(EMDV-EMOEH)}$	Setup time, EMIF_DATA[15:0] valid before EMIFnOE high	9			ns
13	$t_{h(EMOEH-EMDIV)}$	Hold time, EMIF_DATA[15:0] valid after EMIF_nOE high	0			ns
14	$t_{su(EMOEL-EMWAIT)}$	Setup Time, EMIF_nWAIT asserted before end of Strobe Phase(2)	4E+9			ns
Writes						
28	$t_{su(EMWEL-EMWAIT)}$	Setup Time, EMIF_nWAIT asserted before end of Strobe Phase(2)	4E+14			ns

(1) E = EMIF_CLK period in ns.
(2) Setup before end of STROBE phase (if no extended wait states are inserted) by which EMIFnWAIT must be asserted to add extended wait states. Figure 6-12 and Figure 6-14 describe EMIF transactions that include extended wait states inserted during the STROBE phase. However, cycles inserted as part of this extended wait period should not be counted; the 4E requirement is to the start of where the HOLD phase would begin if there were no extended wait cycles.

Table 6-28. EMIF Asynchronous Memory Switching Characteristics[(1)(2)(3)]

NO	PARAMETER		Value			UNIT
			MIN	NOM	MAX	
Reads and Writes						
1	$t_{d(TURNAROUND)}$	Turnaround time	(TA)*E - 4	(TA)*E	(TA)*E + 3	ns
Reads						
3	$t_{c(EMRCYCLE)}$	EMIF read cycle time (EW = 0)	(RS+RST+RH)*E -3	(RS+RST+RH)*E	(RS+RST+RH)*E + 3	ns
		EMIF read cycle time (EW = 1)	(RS+RST+RH+(EWC*16))*E -3	(RS+RST+RH+(EWC*16))*E	(RS+RST+RH+(EWC*16))*E + 3	ns
4	$t_{su(EMCEL-EMOEL)}$	Output setup time, EMIF_nCS[4:2] low to EMIF_nOE low (SS = 0)	(RS)*E-6	(RS)*E	(RS)*E+3	ns
		Output setup time, EMIF_nCS[4:2] low to EMIF_nOE low (SS = 1)	-6	0	+3	ns
5	$t_{h(EMOEH-EMCEH)}$	Output hold time, EMIF_nOE high to EMIF_nCS[4:2] high (SS = 0)	(RH)*E -3	(RH)*E	(RH)*E + 5	ns
		Output hold time, EMIF_nOE high to EMIF_nCS[4:2] high (SS = 1)	-3	0	+5	ns
6	$t_{su(EMBAV-EMOEL)}$	Output setup time, EMIF_BA[1:0] valid to EMIF_nOE low	(RS)*E-6	(RS)*E	(RS)*E+3	ns
7	$t_{h(EMOEH-EMBAIV)}$	Output hold time, EMIF_nOE high to EMIF_BA[1:0] invalid	(RH)*E-3	(RH)*E	(RH)*E+5	ns
8	$t_{su(EMAV-EMOEL)}$	Output setup time, EMIF_ADDR[12:0] valid to EMIFnOE low	(RS)*E-6	(RS)*E	(RS)*E+3	ns
9	$t_{h(EMOEH-EMAIV)}$	Output hold time, EMIF_nOE high to EMIF_ADDR[12:0] invalid	(RH)*E-3	(RH)*E	(RH)*E+5	ns
10	$t_{w(EMOEL)}$	EMIF_nOE active low width (EW = 0)	(RST)*E-3	(RST)*E	(RST)*E+3	ns
		EMIF_nOE active low width (EW = 1)	(RST+(EWC*16)) *E-3	(RST+(EWC*16))*E	(RST+(EWC*16)) *E+3	ns
11	$t_{d(EMWAITH-EMOEH)}$	Delay time from EMIF_nWAIT deasserted to EMIF_nOE high	3E+9	4E	4E+20	ns
29	$t_{su(EMDQMV-EMOEL)}$	Output setup time, EMIF_nDQM[1:0] valid to EMIF_nOE low	(RS)*E-6	(RS)*E	(RS)*E+3	ns
30	$t_{h(EMOEH-EMDQMIV)}$	Output hold time, EMIF_nOE high to EMIF_nDQM[1:0] invalid	(RH)*E-3	(RH)*E	(RH)*E+5	ns
Writes						
15	$t_{c(EMWCYCLE)}$	EMIF write cycle time (EW = 0)	(WS+WST+WH)* E-3	(WS+WST+WH)*E	(WS+WST+WH)* E+3	ns
		EMIF write cycle time (EW = 1)	(WS+WST+WH+(EWC*16))*E -3	(WS+WST+WH+(E WC*16))*E	(WS+WST+WH+(EWC*16))*E + 3	ns

(1) TA = Turnaround, RS = Read setup, RST = Read strobe, RH = Read hold, WS = Write setup, WST = Write strobe, WH = Write hold, MEWC = Maximum external wait cycles. These parameters are programmed through the Asynchronous Bank and Asynchronous Wait Cycle Configuration Registers. These support the following ranges of values: TA[4–1], RS[16–1], RST[64–1], RH[8–1], WS[16–1], WST[64–1], WH[8–1], and MEWC[1–256]. See the TMS570LS12x/11x Technical Reference Manual (SPNU515) for more information.
(2) E = EMIF_CLK period in ns.
(3) EWC = external wait cycles determined by EMIF_nWAIT input signal. EWC supports the following range of values. EWC[256–1]. Note that the maximum wait time before timeout is specified by bit field MEWC in the Asynchronous Wait Cycle Configuration Register. See the TMS570LS12x/11x Technical Reference Manual (SPNU515) for more information.

Copyright © 2012–2015, Texas Instruments Incorporated

Table 6-28. EMIF Asynchronous Memory Switching Characteristics[(1)(2)(3)] (continued)

NO	PARAMETER		Value			UNIT
			MIN	NOM	MAX	
16	$t_{su(EMCEL-EMWEL)}$	Output setup time, EMIF_nCS[4:2] low to EMIF_nWE low (SS = 0)	(WS)*E -3	(WS)*E	(WS)*E + 3	ns
		Output setup time, EMIF_nCS[4:2] low to EMIF_nWE low (SS = 1)	-3	0	+3	ns
17	$t_{h(EMWEH-EMCEH)}$	Output hold time, EMIF_nWE high to EMIF_nCS[4:2] high (SS = 0)	(WH)*E-3	(WH)*E	(WH)*E+3	ns
		Output hold time, EMIF_nWE high to EMIF_CS[4:2] high (SS = 1)	-3	0	+3	ns
18	$t_{su(EMDQMV-EMWEL)}$	Output setup time, EMIF_BA[1:0] valid to EMIF_nWE low	(WS)*E-3	(WS)*E	(WS)*E+3	ns
19	$t_{h(EMWEH-EMDQMIV)}$	Output hold time, EMIF_nWE high to EMIF_BA[1:0] invalid	(WH)*E-3	(WH)*E	(WH)*E+3	ns
20	$t_{su(EMBAV-EMWEL)}$	Output setup time, EMIF_BA[1:0] valid to EMIF_nWE low	(WS)*E-3	(WS)*E	(WS)*E+3	ns
21	$t_{h(EMWEH-EMBAIV)}$	Output hold time, EMIF_nWE high to EMIF_BA[1:0] invalid	(WH)*E-3	(WH)*E	(WH)*E+3	ns
22	$t_{su(EMAV-EMWEL)}$	Output setup time, EMIF_ADDR[12:0] valid to EMIF_nWE low	(WS)*E-3	(WS)*E	(WS)*E+3	ns
23	$t_{h(EMWEH-EMAIV)}$	Output hold time, EMIF_nWE high to EMIF_ADDR[12:0] invalid	(WH)*E-3	(WH)*E	(WH)*E+3	ns
24	$t_{w(EMWEL)}$	EMIF_nWE active low width (EW = 0)	(WST)*E-3	(WST)*E	(WST)*E+3	ns
		EMIF_nWE active low width (EW = 1)	(WST+(EWC*16)) *E-3	(WST+(EWC*16))*E	(WST+(EWC*16)) *E+3	ns
25	$t_{d(EMWAITH-EMWEH)}$	Delay time from EMIF_nWAIT deasserted to EMIF_nWE high	3E+11	4E	4E+24	ns
26	$t_{su(EMDV-EMWEL)}$	Output setup time, EMIF_DATA[15:0] valid to EMIF_nWE low	(WS)*E-3	(WS)*E	(WS)*E+3	ns
27	$t_{h(EMWEH-EMDIV)}$	Output hold time, EMIF_nWE high to EMIF_DATA[15:0] invalid	(WH)*E-3	(WH)*E	(WH)*E+3	ns
31	$t_{su(EMDQMV-EMWEL)}$	Output setup time, EMIF_nDQM[1:0] valid to EMIF_nWE low	(WH)*E-3	(WH)*E	(WH)*E+3	ns
32	$t_{h(EMWEH-EMDQMIV)}$	Output hold time, EMIF_nWE high to EMIF_nDQM[1:0] invalid	(WH)*E-3	(WH)*E	(WH)*E+3	ns

6.14.2.2 Synchronous Timing

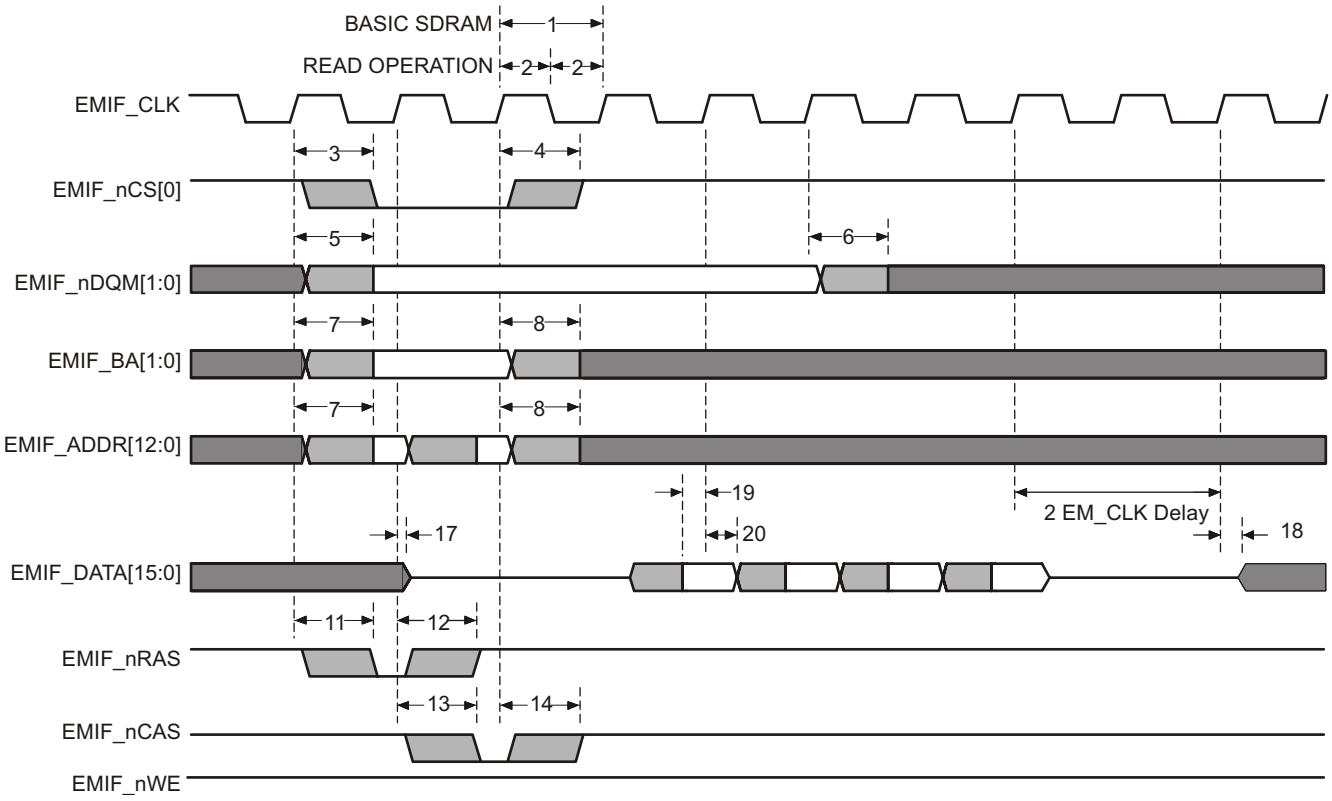

Figure 6-15. Basic SDRAM Read Operation

Copyright © 2012–2015, Texas Instruments Incorporated

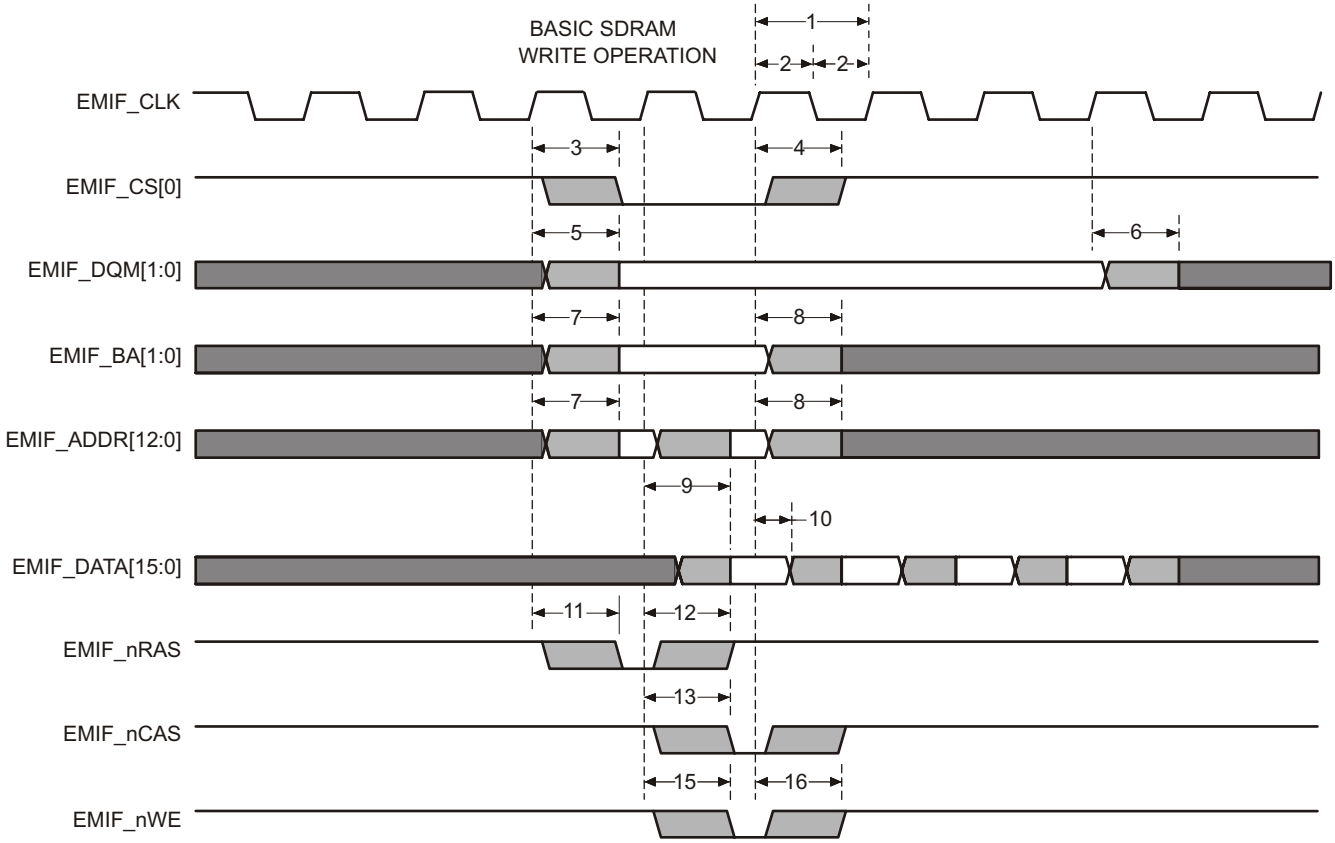

Figure 6-16. Basic SDRAM Write Operation

Table 6-29. EMIF Synchronous Memory Timing Requirements

NO.	Parameter		MIN	MAX	Unit
19	$t_{su(EMIFDV-EM_CLKH)}$	Input setup time, read data valid on EMIF_DATA[15:0] before EMIF_CLK rising	2		ns
20	$t_{h(CLKH-DIV)}$	Input hold time, read data valid on EMIF_DATA[15:0] after EMIF_CLK rising	2		ns

Table 6-30. EMIF Synchronous Memory Switching Characteristics

NO.	Parameter		MIN	MAX	Unit
1	$t_{c(CLK)}$	Cycle time, EMIF clock EMIF_CLK	22		ns
2	$t_{w(CLK)}$	Pulse width, EMIF clock EMIF_CLK high or low	5		ns
3	$t_{d(CLKH-CSV)}$	Delay time, EMIF_CLK rising to EMIF_nCS[0] valid		13	ns
4	$t_{oh(CLKH-CSIV)}$	Output hold time, EMIF_CLK rising to EMIF_nCS[0] invalid	1		ns
5	$t_{d(CLKH-DQMV)}$	Delay time, EMIF_CLK rising to EMIF_nDQM[1:0] valid		13	ns
6	$t_{oh(CLKH-DQMIV)}$	Output hold time, EMIF_CLK rising to EMIF_nDQM[1:0] invalid	1		ns
7	$t_{d(CLKH-AV)}$	Delay time, EMIF_CLK rising to EMIF_ADDR[12:0] and EMIFBA[1:0] valid		13	ns

Table 6-30. EMIF Synchronous Memory Switching Characteristics (continued)

NO.	Parameter		MIN	MAX	Unit
8	$t_{oh(CLKH-AIV)}$	Output hold time, EMIF_CLK rising to EMIF_ADDR[12:0] and EMIF_BA[1:0] invalid	1		ns
9	$t_{d(CLKH-DV)}$	Delay time, EMIF_CLK rising to EMIF_DATA[15:0] valid		13	ns
10	$t_{oh(CLKH-DIV)}$	Output hold time, EMIF_CLK rising to EMIF_DATA[15:0] invalid	1		ns
11	$t_{d(CLKH-RASV)}$	Delay time, EMIF_CLK rising to EMIF_nRAS valid		13	ns
12	$t_{oh(CLKH-RASIV)}$	Output hold time, EMIF_CLK rising to EMIF_nRAS invalid	1		ns
13	$t_{d(CLKH-CASV)}$	Delay time, EMIF_CLK rising to EMIF_nCAS valid		13	ns
14	$t_{oh(CLKH-CASIV)}$	Output hold time, EMIF_CLK rising to EMIF_nCAS invalid	1		ns
15	$t_{d(CLKH-WEV)}$	Delay time, EMIF_CLK rising to EMIF_nWE valid		13	ns
16	$t_{oh(CLKH-WEIV)}$	Output hold time, EMIF_CLK rising to EMIF_nWE invalid	1		ns
17	$t_{dis(CLKH-DHZ)}$	Delay time, EMIF_CLK rising to EMIF_DATA[15:0] tri-stated		7	ns
18	$t_{ena(CLKH-DLZ)}$	Output hold time, EMIF_CLK rising to EMIF_DATA[15:0] driving	1		ns

Copyright © 2012–2015, Texas Instruments Incorporated

6.15 Vectored Interrupt Manager

The vectored interrupt manager (VIM) provides hardware assistance for prioritizing and controlling the many interrupt sources present on this device. Interrupts are caused by events outside of the normal flow of program execution. Normally, these events require a timely response from the central processing unit (CPU); therefore, when an interrupt occurs, the CPU switches execution from the normal program flow to an interrupt service routine (ISR).

6.15.1 VIM Features

The VIM module has the following features:

- Supports 128 interrupt channels.
  - Provides programmable priority and enable for interrupt request lines.
- Provides a direct hardware dispatch mechanism for fastest IRQ dispatch.
- Provides two software dispatch mechanisms when the CPU VIC port is not used.
  - Index interrupt
  - Register vectored interrupt
- Parity protected vector interrupt table against soft errors.

6.15.2 Interrupt Request Assignments

Table 6-31. Interrupt Request Assignments

Modules	Interrupt Sources	Default VIM Interrupt Channel
ESM	ESM High level interrupt (NMI)	0
Reserved	Reserved	1
RTI	RTI compare interrupt 0	2
RTI	RTI compare interrupt 1	3
RTI	RTI compare interrupt 2	4
RTI	RTI compare interrupt 3	5
RTI	RTI overflow interrupt 0	6
RTI	RTI overflow interrupt 1	7
RTI	RTI timebase interrupt	8
GIO	GIO interrupt A	9
N2HET1	N2HET1 level 0 interrupt	10
HTU1	HTU1 level 0 interrupt	11
MIBSPI1	MIBSPI1 level 0 interrupt	12
LIN	LIN level 0 interrupt	13
MIBADC1	MIBADC1 event group interrupt	14
MIBADC1	MIBADC1 sw group 1 interrupt	15
DCAN1	DCAN1 level 0 interrupt	16
SPI2	SPI2 level 0 interrupt	17
FlexRay	FlexRay level 0 interrupt	18
CRC	CRC Interrupt	19
ESM	ESM Low level interrupt	20
SYSTEM	Software interrupt (SSI)	21
CPU	PMU Interrupt	22
GIO	GIO interrupt B	23
N2HET1	N2HET1 level 1 interrupt	24
HTU1	HTU1 level 1 interrupt	25
MIBSPI1	MIBSPI1 level 1 interrupt	26

Copyright © 2012–2015, Texas Instruments Incorporated

Table 6-31. Interrupt Request Assignments (continued)

Modules	Interrupt Sources	Default VIM Interrupt Channel
LIN	LIN level 1 interrupt	27
MIBADC1	MIBADC1 sw group 2 interrupt	28
DCAN1	DCAN1 level 1 interrupt	29
SPI2	SPI2 level 1 interrupt	30
MIBADC1	MIBADC1 magnitude compare interrupt	31
FlexRay	FlexRay level 1 interrupt	32
DMA	FTCA interrupt	33
DMA	LFSA interrupt	34
DCAN2	DCAN2 level 0 interrupt	35
Reserved	Reserved	36
MIBSPI3	MIBSPI3 level 0 interrupt	37
MIBSPI3	MIBSPI3 level 1 interrupt	38
DMA	HBCA interrupt	39
DMA	BTCA interrupt	40
EMIF	AEMIFINT3	41
DCAN2	DCAN2 level 1 interrupt	42
Reserved	Reserved	43
DCAN1	DCAN1 IF3 interrupt	44
DCAN3	DCAN3 level 0 interrupt	45
DCAN2	DCAN2 IF3 interrupt	46
FPU	FPU interrupt	47
FlexRay TU (FTU)	FTU Transfer Status interrupt	48
SPI4	SPI4 level 0 interrupt	49
MIBADC2	MibADC2 event group interrupt	50
MIBADC2	MibADC2 sw group1 interrupt	51
FlexRay	FlexRay T0C interrupt	52
MIBSPI5	MIBSPI5 level 0 interrupt	53
SPI4	SPI4 level 1 interrupt	54
DCAN3	DCAN3 level 1 interrupt	55
MIBSPI5	MIBSPI5 level 1 interrupt	56
MIBADC2	MibADC2 sw group2 interrupt	57
FlexRay TU (FTU)	FTU Error interrupt	58
MIBADC2	MibADC2 magnitude compare interrupt	59
DCAN3	DCAN3 IF3 interrupt	60
FMC	FSM_DONE interrupt	61
FlexRay	FlexRay T1C interrupt	62
N2HET2	N2HET2 level 0 interrupt	63
SCI	SCI level 0 interrupt	64
HTU2	HTU2 level 0 interrupt	65
I2C	I2C level 0 interrupt	66
Reserved	Reserved	67-72
N2HET2	N2HET2 level 1 interrupt	73
SCI	SCI level 1 interrupt	74
HTU2	HTU2 level 1 interrupt	75
Reserved	Reserved	76-79
HWAG1	HWA_INT_REQ_H	80
HWAG2	HWA_INT_REQ_H	81

Copyright © 2012–2015, Texas Instruments Incorporated

Table 6-31. Interrupt Request Assignments (continued)

Modules	Interrupt Sources	Default VIM Interrupt Channel
DCC1	DCC done interrupt	82
DCC2	DCC2 done interrupt	83
Reserved	Reserved	84
PBIST Controller	PBIST Done Interrupt	85
Reserved	Reserved	86-87
HWAG1	HWA_INT_REQ_L	88
HWAG2	HWA_INT_REQ_L	89
ePWM1INTn	ePWM1 Interrupt	90
ePWM1TZINTn	ePWM1 Trip Zone Interrupt	91
ePWM2INTn	ePWM2 Interrupt	92
ePWM2TZINTn	ePWM2 Trip Zone Interrupt	93
ePWM3INTn	ePWM3 Interrupt	94
ePWM3TZINTn	ePWM3 Trip Zone Interrupt	95
ePWM4INTn	ePWM4 Interrupt	96
ePWM4TZINTn	ePWM4 Trip Zone Interrupt	97
ePWM5INTn	ePWM5 Interrupt	98
ePWM5TZINTn	ePWM5 Trip Zone Interrupt	99
ePWM6INTn	ePWM6 Interrupt	100
ePWM6TZINTn	ePWM6 Trip Zone Interrupt	101
ePWM7INTn	ePWM7 Interrupt	102
ePWM7TZINTn	ePWM7 Trip Zone Interrupt	103
eCAP1INTn	eCAP1 Interrupt	104
eCAP2INTn	eCAP2 Interrupt	105
eCAP3INTn	eCAP3 Interrupt	106
eCAP4INTn	eCAP4 Interrupt	107
eCAP5INTn	eCAP5 Interrupt	108
eCAP6INTn	eCAP6 Interrupt	109
eQEP1INTn	eQEP1 Interrupt	110
eQEP2INTn	eQEP2 Interrupt	111
Reserved	Reserved	112-127

NOTE

Address location 0x00000000 in the VIM RAM is reserved for the phantom interrupt ISR entry; therefore only request channels 0..126 can be used and are offset by 1 address in the VIM RAM.

NOTE

The EMIF_nWAIT signal has a pull-up on it. The EMIF module generates a "Wait Rise" interrupt whenever it detects a rising edge on the EMIF_nWAIT signal. This interrupt condition is indicated as soon as the device is powered up. This can be ignored if the EMIF_nWAIT signal is not used in the application. If the EMIF_nWAIT signal is actually used in the application, then the external slave memory must always drive the EMIF_nWAIT signal such that an interrupt is not caused due to the default pull-up on this signal.

NOTE

The lower-order interrupt channels are higher priority channels than the higher-order interrupt channels.

NOTE

The application can change the mapping of interrupt sources to the interrupt channels through the interrupt channel control registers (CHANCTRLx) inside the VIM module.

Copyright © 2012–2015, Texas Instruments Incorporated

6.16 DMA Controller

The DMA controller is used to transfer data between two locations in the memory map in the background of CPU operations. Typically, the DMA is used to:

- Transfer blocks of data between external and internal data memories
- Restructure portions of internal data memory
- Continually service a peripheral

6.16.1 DMA Features

- CPU independent data transfer
- One 64-bit master port that interfaces to the Memory System.
- FIFO buffer(4 entries deep and each 64bit wide)
- Channel control information is stored in RAM protected by parity
- 16 channels with individual enable
- Channel chaining capability
- 32 peripheral DMA requests
- Hardware and Software DMA requests
- 8, 16, 32 or 64-bit transactions supported
- Multiple addressing modes for source/destination (fixed, increment, offset)
- Auto-initiation
- Power-management mode
- Memory Protection with four configurable memory regions

6.16.2 Default DMA Request Map

The DMA module on this microcontroller has 16 channels and up to 32 hardware DMA requests. The module contains DREQASIx registers which are used to map the DMA requests to the DMA channels. By default, channel 0 is mapped to request 0, channel 1 to request 1, and so on.

Some DMA requests have multiple sources, as shown in Table 6-32. The application must ensure that only one of these DMA request sources is enabled at any time.

Table 6-32. DMA Request Line Connection

Modules	DMA Request Sources	DMA Request
MIBSPI1	MIBSPI1[1] (1)	DMAREQ[0]
MIBSPI1	MIBSPI1[0] (2)	DMAREQ[1]
SPI2	SPI2 receive	DMAREQ[2]
SPI2	SPI2 transmit	DMAREQ[3]
MIBSPI1 / MIBSPI3 / DCAN2	MIBSPI1[2] / MIBSPI3[2] / DCAN2 IF3	DMAREQ[4]
MIBSPI1 / MIBSPI3 / DCAN2	MIBSPI1[3] / MIBSPI3[3] / DCAN2 IF2	DMAREQ[5]
DCAN1 / MIBSPI5	DCAN1 IF2 / MIBSPI5[2]	DMAREQ[6]
MIBADC1 / MIBSPI5	MIBADC1 event / MIBSPI5[3]	DMAREQ[7]
MIBSPI1 / MIBSPI3 / DCAN1	MIBSPI1[4] / MIBSPI3[4] / DCAN1 IF1	DMAREQ[8]
MIBSPI1 / MIBSPI3 / DCAN2	MIBSPI1[5] / MIBSPI3[5] / DCAN2 IF1	DMAREQ[9]
MIBADC1 / I2C / MIBSPI5	MIBADC1 G1 / I2C receive / MIBSPI5[4]	DMAREQ[10]
MIBADC1 / I2C / MIBSPI5	MIBADC1 G2 / I2C transmit / MIBSPI5[5]	DMAREQ[11]
RTI / MIBSPI1 / MIBSPI3	RTI DMAREQ0 / MIBSPI1[6] / MIBSPI3[6]	DMAREQ[12]
RTI / MIBSPI1 / MIBSPI3	RTI DMAREQ1 / MIBSPI1[7] / MIBSPI3[7]	DMAREQ[13]
MIBSPI3 / MibADC2 / MIBSPI5	MIBSPI3[1] (1) / MibADC2 event / MIBSPI5[6]	DMAREQ[14]
MIBSPI3 / MIBSPI5	MIBSPI3[0] (2) / MIBSPI5[7]	DMAREQ[15]
MIBSPI1 / MIBSPI3 / DCAN1 / MibADC2	MIBSPI1[8] / MIBSPI3[8] / DCAN1 IF3 / MibADC2 G1	DMAREQ[16]
MIBSPI1 / MIBSPI3 / DCAN3 / MibADC2	MIBSPI1[9] / MIBSPI3[9] / DCAN3 IF1 / MibADC2 G2	DMAREQ[17]
RTI / MIBSPI5	RTI DMAREQ2 / MIBSPI5[8]	DMAREQ[18]
RTI / MIBSPI5	RTI DMAREQ3 / MIBSPI5[9]	DMAREQ[19]
N2HET1 / N2HET2 / DCAN3	N2HET1 DMAREQ[4] / N2HET2 DMAREQ[4] / DCAN3 IF2	DMAREQ[20]
N2HET1 / N2HET2 / DCAN3	N2HET1 DMAREQ[5] / N2HET2 DMAREQ[5] / DCAN3 IF3	DMAREQ[21]
MIBSPI1 / MIBSPI3 / MIBSPI5	MIBSPI1[10] / MIBSPI3[10] / MIBSPI5[10]	DMAREQ[22]
MIBSPI1 / MIBSPI3 / MIBSPI5	MIBSPI1[11] / MIBSPI3[11] / MIBSPI5[11]	DMAREQ[23]
N2HET1 / N2HET2 / SPI4 / MIBSPI5	N2HET1 DMAREQ[6] / N2HET2 DMAREQ[6] / SPI4 receive / MIBSPI5[12]	DMAREQ[24]
N2HET1 / N2HET2 / SPI4 / MIBSPI5	N2HET1 DMAREQ[7] / N2HET2 DMAREQ[7] / SPI4 transmit / MIBSPI5[13]	DMAREQ[25]
CRC / MIBSPI1 / MIBSPI3	CRC DMAREQ[0] / MIBSPI1[12] / MIBSPI3[12]	DMAREQ[26]
CRC / MIBSPI1 / MIBSPI3	CRC DMAREQ[1] / MIBSPI1[13] / MIBSPI3[13]	DMAREQ[27]
LIN / MIBSPI5	LIN receive / MIBSPI5[14]	DMAREQ[28]
LIN / MIBSPI5	LIN transmit / MIBSPI5[15]	DMAREQ[29]
MIBSPI1 / MIBSPI3 / SCI / MIBSPI5	MIBSPI1[14] / MIBSPI3[14] / SCI receive / MIBSPI5[1] (1)	DMAREQ[30]
MIBSPI1 / MIBSPI3 / SCI / MIBSPI5	MIBSPI1[15] / MIBSPI3[15] / SCI transmit / MIBSPI5[0] (2)	DMAREQ[31]

(1) Receive DMA when configured in standard SPI mode
(2) Transmit DMA when configured in standard SPI mode

Copyright © 2012–2015, Texas Instruments Incorporated

6.17 Real Time Interrupt Module

The real-time interrupt (RTI) module provides timer functionality for operating systems and for benchmarking code. The RTI module can incorporate several counters that define the timebases needed for scheduling an operating system.

The timers also allow you to benchmark certain areas of code by reading the values of the counters at the beginning and the end of the desired code range and calculating the difference between the values.

In addition the RTI provides a mechanism to synchronize the operating system to the FlexRay communication cycle. Clock supervision can detect issues on the FlexRay bus with an automatic switch to an internally generated timebase.

6.17.1 Features

The RTI module has the following features:

- Two independent 64 bit counter blocks
- Four configurable compares for generating operating system ticks or DMA requests. Each event can be driven by either counter block 0 or counter block 1.
- One counter block usable for application synchronization to FlexRay network including clock supervision
- Fast enabling/disabling of events
- Two time-stamp (capture) functions for system or peripheral interrupts, one for each counter block

6.17.2 Block Diagrams

Figure 6-17 shows a high-level block diagram for one of the two 64-bit counter blocks inside the RTI module. Both the counter blocks are identical except the Network Time Unit (NTUx) inputs are only available as time base inputs for the counter block 0.

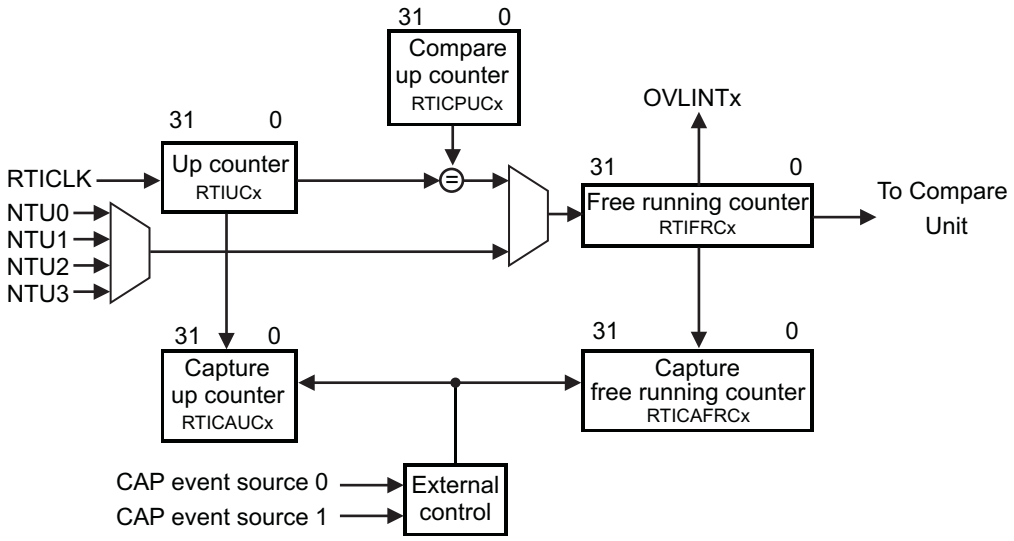

Figure 6-17. Counter Block Diagram

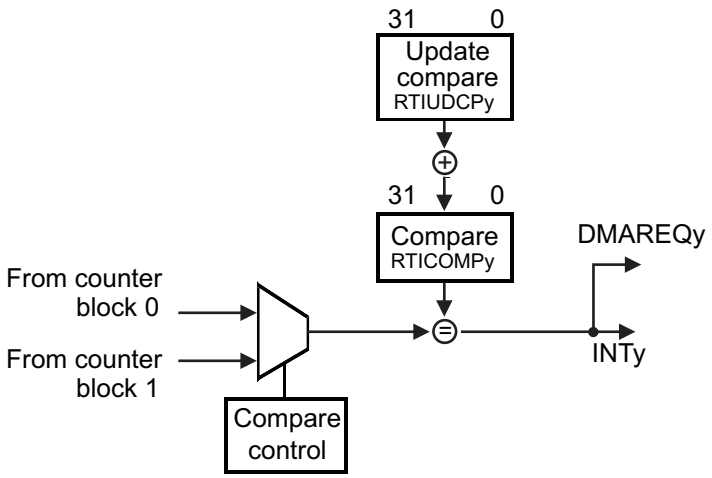

Figure 6-18. Compare Block Diagram

6.17.3 Clock Source Options

The RTI module uses the RTI1CLK clock domain for generating the RTI time bases.

The application can select the clock source for the RTI1CLK by configuring the RCLKSRC register in the System module at address 0xFFFFFF50. The default source for RTI1CLK is VCLK.

For more information on clock sources refer to Table 6-8 and Table 6-13.

6.17.4 Network Time Synchronization Inputs

The RTI module supports 4 Network Time Unit (NTU) inputs that signal internal system events, and which can be used to synchronize the time base used by the RTI module. On this device, these NTU inputs are connected as shown below.

Table 6-33. Network Time Synchronization Inputs

NTU Input	Source
0	FlexRay Macrotick
1	FlexRay Start of Cycle
2	PLL2 Clock output
3	EXTCLKIN1 clock input

Copyright © 2012–2015, Texas Instruments Incorporated

6.18 Error Signaling Module

The Error Signaling Module (ESM) manages the various error conditions on the microcontroller. The error condition is handled based on a fixed severity level assigned to it. Any severe error condition can be configured to drive a low level on a dedicated device terminal called nERROR. This can be used as an indicator to an external monitor circuit to put the system into a safe state.

6.18.1 Features

The features of the Error Signaling Module are:

- 128 interrupt/error channels are supported, divided into 3 different groups
  - 64 channels with maskable interrupt and configurable error pin behavior
  - 32 error channels with non-maskable interrupt and predefined error pin behavior
  - 32 channels with predefined error pin behavior only
- Error pin to signal severe device failure
- Configurable timebase for error signal
- Error forcing capability

6.18.2 ESM Channel Assignments

The Error Signaling Module (ESM) integrates all the device error conditions and groups them in the order of severity. Group1 is used for errors of the lowest severity while Group3 is used for errors of the highest severity. The device response to each error is determined by the severity group it is connected to. Table 6-35 shows the channel assignment for each group.

Table 6-34. ESM Groups

ERROR GROUP	INTERRUPT CHARACTERISTICS	INFLUENCE ON ERROR PIN
Group1	maskable, low or high priority	configurable
Group2	non-maskable, high priority	fixed
Group3	no interrupt generated	fixed

Table 6-35. ESM Channel Assignments

ERROR Condition	Group	Channels
Reserved	Group1	0
MibADC2 - RAM parity error	Group1	1
DMA - MPU configuration violation	Group1	2
DMA - control packet RAM parity error	Group1	3
Reserved	Group1	4
DMA - error on DMA read access, imprecise error	Group1	5
FMC - correctable ECC error: bus1 and bus2 interfaces (does not include accesses to Bank 7)	Group1	6
N2HET1 - RAM parity error	Group1	7
HTU1/HTU2 - dual-control packet RAM parity error	Group1	8
HTU1/HTU2 - MPU configuration violation	Group1	9
PLL1 - Slip	Group1	10
Clock Monitor - oscillator fail	Group1	11
Flexray - message RAM parity error	Group1	12
DMA - error on DMA write access, imprecise error	Group1	13
Flexray TU (FTU) - control packet RAM parity error	Group1	14
VIM RAM - parity error	Group1	15
FTU - MPU configuration violation	Group1	16
MibSPI1 - RAM parity error	Group1	17
MibSPI3 - RAM parity error	Group1	18

Copyright © 2012–2015, Texas Instruments Incorporated

Table 6-35. ESM Channel Assignments (continued)

ERROR Condition	Group	Channels
MibADC1 - RAM parity error	Group1	19
Reserved	Group1	20
DCAN1 - RAM parity error	Group1	21
DCAN3 - RAM parity error	Group1	22
DCAN2 - RAM parity error	Group1	23
MibSPI5 - RAM parity error	Group1	24
Reserved	Group1	25
RAM even bank (B0TCM) - correctable ECC error	Group1	26
CPU - self-test failed	Group1	27
RAM odd bank (B1TCM) - correctable ECC error	Group1	28
Reserved	Group1	29
DCC1 - error	Group1	30
CCM-R4 - self-test failed	Group1	31
Reserved	Group1	32
Reserved	Group1	33
N2HET2 - RAM parity error	Group1	34
FMC - correctable ECC error (Bank 7 access)	Group1	35
FMC - uncorrectable ECC error (Bank 7 access)	Group1	36
IOMM - Access to unimplemented location in IOMM frame, or write access detected in unprivileged mode	Group1	37
Power domain controller compare error	Group1	38
Power domain controller self-test error	Group1	39
eFuse Controller Error – this error signal is generated when any bit in the eFuse controller error status register is set. The application can choose to generate an interrupt whenever this bit is set to service any eFuse controller error conditions.	Group1	40
eFuse Controller - Self Test Error. This error signal is generated only when a self test on the eFuse controller generates an error condition. When an ECC self test error is detected, group 1 channel 40 error signal will also be set.	Group1	41
PLL#2 - Slip	Group1	42
Reserved	Group1	43
Reserved	Group1	44
Reserved	Group1	45
Reserved	Group1	46
Reserved	Group1	47
Reserved	Group1	48
Reserved	Group1	49
Reserved	Group1	50
Reserved	Group1	51
Reserved	Group1	52
Reserved	Group1	53
Reserved	Group1	54
Reserved	Group1	55
Reserved	Group1	56
Reserved	Group1	57
Reserved	Group1	58
Reserved	Group1	59
Reserved	Group1	60
Reserved	Group1	61
DCC2 - error	Group1	62

Copyright © 2012–2015, Texas Instruments Incorporated

Table 6-35. ESM Channel Assignments (continued)

ERROR Condition	Group	Channels
Reserved	Group1	63
Reserved	Group2	0
Reserved	Group2	1
CCMR4 - dual-CPU lock-step error	Group2	2
Reserved	Group2	3
FMC - uncorrectable address parity error on accesses to main flash	Group2	4
Reserved	Group2	5
RAM even bank (B0TCM) - uncorrectable redundant address decode error	Group2	6
Reserved	Group2	7
RAM odd bank (B1TCM) - uncorrectable redundant address decode error	Group2	8
Reserved	Group2	9
RAM even bank (B0TCM) - address bus parity error	Group2	10
Reserved	Group2	11
RAM odd bank (B1TCM) - address bus parity error	Group2	12
Reserved	Group2	13
Reserved	Group2	14
Reserved	Group2	15
TCM - ECC live lock detect	Group2	16
Reserved	Group2	17
Reserved	Group2	18
Reserved	Group2	19
Reserved	Group2	20
Reserved	Group2	21
Reserved	Group2	22
Reserved	Group2	23
Windowed Watchdog (WWD) violation	Group2	24
Reserved	Group2	25
Reserved	Group2	26
Reserved	Group2	27
Reserved	Group2	28
Reserved	Group2	29
Reserved	Group2	30
Reserved	Group2	31
Reserved	Group3	0
eFuse Farm - autoload error	Group3	1
Reserved	Group3	2
RAM even bank (B0TCM) - ECC uncorrectable error	Group3	3
Reserved	Group3	4
RAM odd bank (B1TCM) - ECC uncorrectable error	Group3	5
Reserved	Group3	6
FMC - uncorrectable ECC error: ATCM and Flash OTP interfaces (does not include address parity error and errors on accesses to Bank 7 data memory)	Group3	7
Reserved	Group3	8
Reserved	Group3	9
Reserved	Group3	10
Reserved	Group3	11
Reserved	Group3	12

Table 6-35. ESM Channel Assignments (continued)

ERROR Condition	Group	Channels
Reserved	Group3	13
Reserved	Group3	14
Reserved	Group3	15
Reserved	Group3	16
Reserved	Group3	17
Reserved	Group3	18
Reserved	Group3	19
Reserved	Group3	20
Reserved	Group3	21
Reserved	Group3	22
Reserved	Group3	23
Reserved	Group3	24
Reserved	Group3	25
Reserved	Group3	26
Reserved	Group3	27
Reserved	Group3	28
Reserved	Group3	29
Reserved	Group3	30
Reserved	Group3	31

Copyright © 2012–2015, Texas Instruments Incorporated

6.19 Reset / Abort / Error Sources

Table 6-36. Reset/Abort/Error Sources

ERROR SOURCE	SYSTEM MODE	ERROR RESPONSE	ESM HOOKUP group.channel
CPU TRANSACTIONS			
Precise write error (NCNB/Strongly Ordered)	User/Privilege	Precise Abort (CPU)	n/a
Precise read error (NCB/Device or Normal)	User/Privilege	Precise Abort (CPU)	n/a
Imprecise write error (NCB/Device or Normal)	User/Privilege	Imprecise Abort (CPU)	n/a
Illegal instruction	User/Privilege	Undefined Instruction Trap (CPU)(1)	n/a
MPU access violation	User/Privilege	Abort (CPU)	n/a
SRAM			
B0 TCM (even) ECC single error (correctable)	User/Privilege	ESM	1.26
B0 TCM (even) ECC double error (non-correctable)	User/Privilege	Abort (CPU), ESM => nERROR	3.3
B0 TCM (even) uncorrectable error (for example, redundant address decode)	User/Privilege	ESM => NMI => nERROR	2.6
B0 TCM (even) address bus parity error	User/Privilege	ESM => NMI => nERROR	2.10
B1 TCM (odd) ECC single error (correctable)	User/Privilege	ESM	1.28
B1 TCM (odd) ECC double error (non-correctable)	User/Privilege	Abort (CPU), ESM => nERROR	3.5
B1 TCM (odd) uncorrectable error (for example, redundant address decode)	User/Privilege	ESM => NMI => nERROR	2.8
B1 TCM (odd) address bus parity error	User/Privilege	ESM => NMI => nERROR	2.12
FLASH WITH CPU BASED ECC			
FMC correctable error - Bus1 and Bus2 interfaces (does not include accesses to Bank 7)	User/Privilege	ESM	1.6
FMC uncorrectable error - Bus1 and Bus2 accesses (does not include address parity error)	User/Privilege	Abort (CPU), ESM => nERROR	3.7
FMC uncorrectable error - address parity error on Bus1 accesses	User/Privilege	ESM => NMI => nERROR	2.4
FMC correctable error - Accesses to Bank 7	User/Privilege	ESM	1.35
FMC uncorrectable error - Accesses to Bank 7	User/Privilege	ESM	1.36
DMA TRANSACTIONS			
External imprecise error on read (Illegal transaction with ok response)	User/Privilege	ESM	1.5
External imprecise error on write (Illegal transaction with ok response)	User/Privilege	ESM	1.13
Memory access permission violation	User/Privilege	ESM	1.2
Memory parity error	User/Privilege	ESM	1.3
High-End Timer Transfer Unit 1 (HTU1)			
NCNB (Strongly Ordered) transaction with slave error response	User/Privilege	Interrupt => VIM	n/a
External imprecise error (Illegal transaction with ok response)	User/Privilege	Interrupt => VIM	n/a
Memory access permission violation	User/Privilege	ESM	1.9
Memory parity error	User/Privilege	ESM	1.8
High-End Timer Transfer Unit 2 (HTU2)			
NCNB (Strongly Ordered) transaction with slave error response	User/Privilege	Interrupt => VIM	n/a
External imprecise error (Illegal transaction with ok response)	User/Privilege	Interrupt => VIM	n/a
Memory access permission violation	User/Privilege	ESM	1.9
Memory parity error	User/Privilege	ESM	1.8

(1) The Undefined Instruction TRAP is NOT detectable outside the CPU. The trap is taken only if the instruction reaches the execute stage of the CPU.

Copyright © 2012–2015, Texas Instruments Incorporated

Table 6-36. Reset/Abort/Error Sources (continued)

ERROR SOURCE	SYSTEM MODE	ERROR RESPONSE	ESM HOOKUP group.channel
N2HET1			
Memory parity error	User/Privilege	ESM	1.7
N2HET2			
Memory parity error	User/Privilege	ESM	1.34
FLEXRAY			
Memory parity error	User/Privilege	ESM	1.12
FLEXRAY Transfer Unit (FTU)			
NCNB (Strongly Ordered) transaction with slave error response	User/Privilege	Interrupt => VIM	n/a
External imprecise error (Illegal transaction with ok response)	User/Privilege	Interrupt => VIM	n/a
Memory access permission violation	User/Privilege	ESM	1.16
Memory parity error	User/Privilege	ESM	1.14
MIBSPI			
MibSPI1 memory parity error	User/Privilege	ESM	1.17
MibSPI3 memory parity error	User/Privilege	ESM	1.18
MibSPI5 memory parity error	User/Privilege	ESM	1.24
MIBADC			
MibADC1 Memory parity error	User/Privilege	ESM	1.19
MibADC2 Memory parity error	User/Privilege	ESM	1.1
DCAN			
DCAN1 memory parity error	User/Privilege	ESM	1.21
DCAN2 memory parity error	User/Privilege	ESM	1.23
DCAN3 memory parity error	User/Privilege	ESM	1.22
PLL			
PLL slip error	User/Privilege	ESM	1.10
PLL #2 slip error	User/Privilege	ESM	1.42
CLOCK MONITOR			
Clock monitor interrupt	User/Privilege	ESM	1.11
DCC			
DCC1 error	User/Privilege	ESM	1.30
DCC2 error	User/Privilege	ESM	1.62
CCM-R4			
Self test failure	User/Privilege	ESM	1.31
Compare failure	User/Privilege	ESM => NMI => nERROR	2.2
VIM			
Memory parity error	User/Privilege	ESM	1.15
VOLTAGE MONITOR			
VMON out of voltage range	n/a	Reset	n/a
CPU SELFTEST (LBIST)			
CPU Selftest (LBIST) error	User/Privilege	ESM	1.27
PIN MULTIPLEXING CONTROL			
Mux configuration error	User/Privilege	ESM	1.37
POWER DOMAIN CONTROL			
PSCON compare error	User/Privilege	ESM	1.38
PSCON self-test error	User/Privilege	ESM	1.39
eFuse CONTROLLER			
eFuse Controller Autoload error	User/Privilege	ESM => nERROR	3.1
eFuse Controller - Any bit set in the error status register	User/Privilege	ESM	1.40

Copyright © 2012–2015, Texas Instruments Incorporated

Table 6-36. Reset/Abort/Error Sources (continued)

ERROR SOURCE	SYSTEM MODE	ERROR RESPONSE	ESM HOOKUP group.channel
eFuse Controller self-test error	User/Privilege	ESM	1.41
WINDOWED WATCHDOG			
WWD Non-Maskable Interrupt exception	n/a	ESM => NMI => nERROR	2.24
ERRORS REFLECTED IN THE SYSESR REGISTER			
Power-Up Reset	n/a	Reset	n/a
Oscillator fail / PLL slip (2)	n/a	Reset	n/a
Watchdog exception	n/a	Reset	n/a
CPU Reset (driven by the CPU STC)	n/a	Reset	n/a
Software Reset	n/a	Reset	n/a
External Reset	n/a	Reset	n/a

(2) Oscillator fail/PLL slip can be configured in the system register (SYS.PLLCTL1) to generate a reset.

6.20 Digital Windowed Watchdog

This device includes a digital windowed watchdog (DWWD) module that protects against runaway code execution.

The DWWD module allows the application to configure the time window within which the DWWD module expects the application to service the watchdog. A watchdog violation occurs if the application services the watchdog outside of this window, or fails to service the watchdog at all. The application can choose to generate a system reset or an ESM group2 error signal in case of a watchdog violation.

The watchdog is disabled by default and must be enabled by the application. Once enabled, the watchdog can only be disabled upon a system reset.

Copyright © 2012–2015, Texas Instruments Incorporated

6.21 Debug Subsystem

6.21.1 Block Diagram

The device contains an ICEPICK module to allow JTAG access to the scan chains.

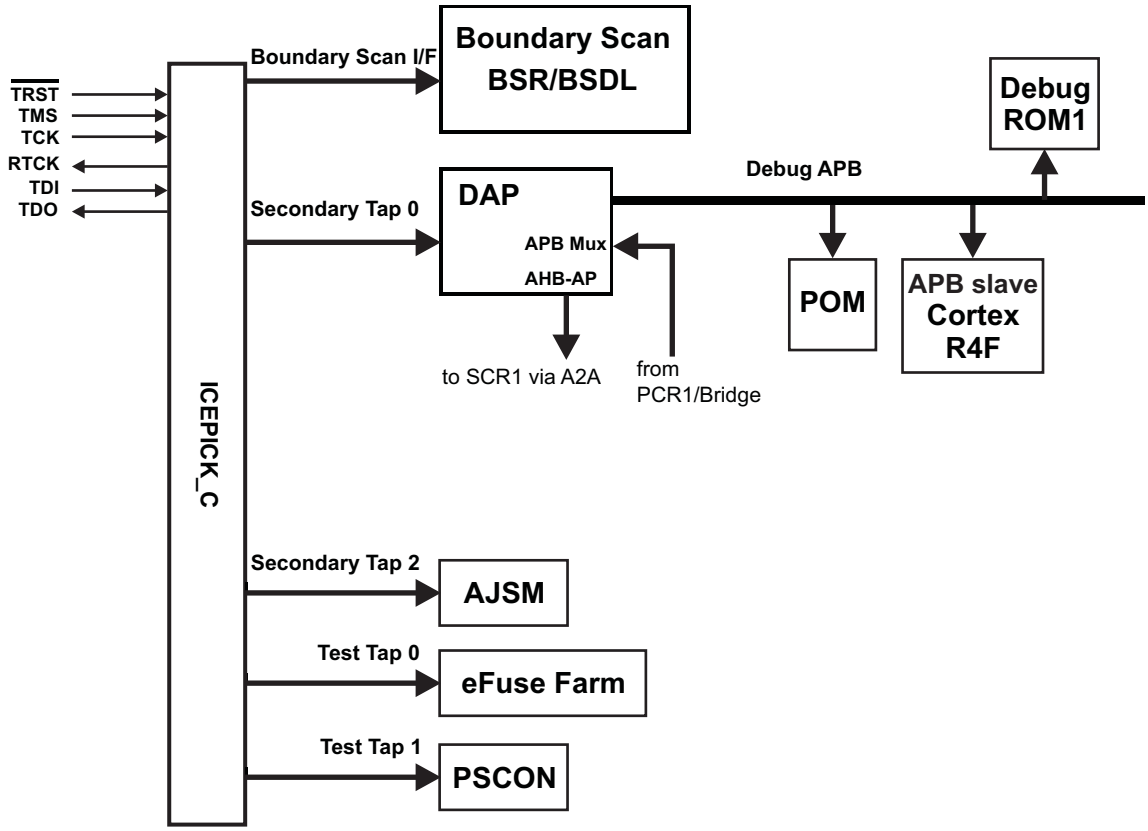

Figure 6-19. Debug Subsystem Block Diagram

6.21.2 Debug Components Memory Map

Table 6-37. Debug Components Memory Map

MODULE NAME	FRAME CHIP SELECT	FRAME ADDRESS RANGE		FRAME SIZE	ACTUAL SIZE	RESPNSE FOR ACCESS TO UNIMPLEMENTED LOCATIONS IN FRAME
		START	END			
CoreSight Debug ROM	CSCS0	0xFFA0_0000	0xFFA0_0FFF	4KB	4KB	Reads return zeros, writes have no effect
Cortex-R4F Debug	CSCS1	0xFFA0_1000	0xFFA0_1FFF	4KB	4KB	Reads return zeros, writes have no effect

6.21.3 JTAG Identification Code

The JTAG ID code for this device is the same as the device ICEPick Identification Code.

Table 6-38. JTAG ID Code

Silicon Revision	ID
Rev A	0x0B95502F
Rev B	0x2B95502F
Rev C	0x3B95502F

6.21.4 Debug ROM

The Debug ROM stores the location of the components on the Debug APB bus:

Table 6-39. Debug ROM table

ADDRESS	DESCRIPTION	VALUE
0x000	pointer to Cortex-R4F	0x0000 1003
0x001	Reserved	0x0000 2002
0x002	Reserved	0x0000 3002
0x003	POM	0x0000 4003
0x004	end of table	0x0000 0000

Copyright © 2012–2015, Texas Instruments Incorporated

6.21.5 JTAG Scan Interface Timings

Table 6-40. JTAG Scan Interface Timing (1)

No.	Parameter		Min	MAX	Unit
	fTCK	TCK frequency (at HCLKmax)		12	MHz
	fRTCK	RTCK frequency (at TCKmax and HCLKmax)	10		MHz
1	td(TCK -RTCK)	Delay time, TCK to RTCK		24	ns
2	tsu(TDI/TMS - RTCKr)	Setup time, TDI, TMS before RTCK rise (RTCKr)	26		ns
3	th(RTCKr -TDI/TMS)	Hold time, TDI, TMS after RTCKr	0		ns
4	th(RTCKr -TDO)	Hold time, TDO after RTCKf	0		ns
5	td(TCKf -TDO)	Delay time, TDO valid after RTCK fall (RTCKf)		12	ns

(1) Timings for TDO are specified for a maximum of 50pF load on TDO

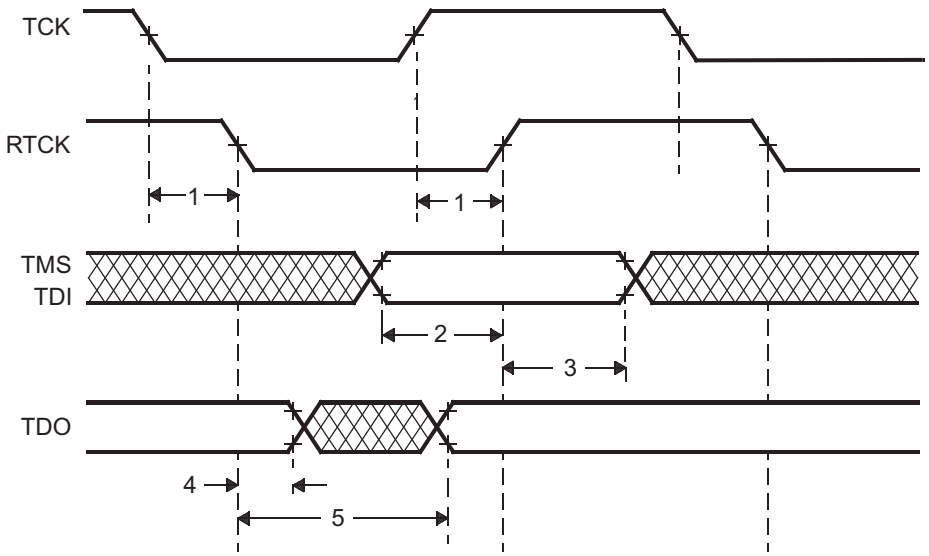

Figure 6-20. JTAG Timing

6.21.6 Advanced JTAG Security Module

This device includes a an Advanced JTAG Security Module (AJSM). which provides maximum security to the device's memory content by allowing users to secure the device after programming.

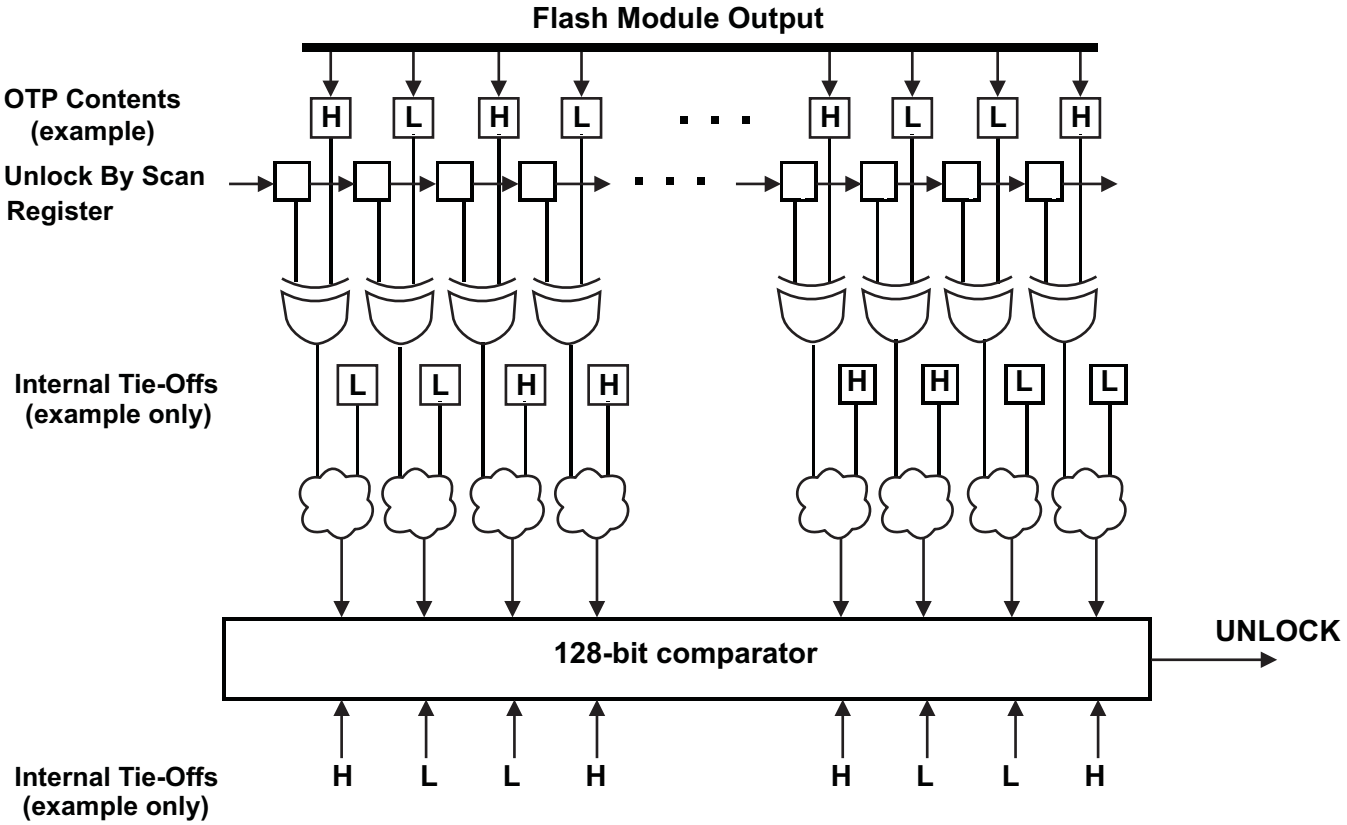

Figure 6-21. AJSM Unlock

The device is unsecure by default by virtue of a 128-bit visible unlock code programmed in the OTP address 0xF0000000.The OTP contents are XOR-ed with the "Unlock By Scan" register contents. The outputs of these XOR gates are again combined with a set of secret internal tie-offs. The output of this combinational logic is compared against a secret hard-wired 128-bit value. A match results in the UNLOCK signal being asserted, so that the device is now unsecure.

A user can secure the device by changing at least one bit in the visible unlock code from 1 to 0. Changing a 0 to 1 is not possible since the visible unlock code is stored in the One Time Programmable (OTP) flash region. Also, changing all the 128 bits to zeros is not a valid condition and will permanently secure the device.

Once secured, a user can unsecure the device by scanning an appropriate value into the "Unlock By Scan" register of the AJSM module. This register is accessible by configuring an IR value of 0b1011 on the AJSM TAP. The value to be scanned is such that the XOR of the OTP contents and the Unlock-By-Scan register contents results in the original visible unlock code.

The Unlock-By-Scan register is reset only upon asserting power-on reset (nPORRST).

A secure device only permits JTAG accesses to the AJSM scan chain through the Secondary Tap # 2 of the ICEPick module. All other secondary taps, test taps and the boundary scan interface are not accessible in this state.

Copyright © 2012–2015, Texas Instruments Incorporated

6.21.7 Boundary Scan Chain

The device supports BSDL-compliant boundary scan for testing pin-to-pin compatibility. The boundary scan chain is connected to the Boundary Scan Interface of the ICEPICK module.

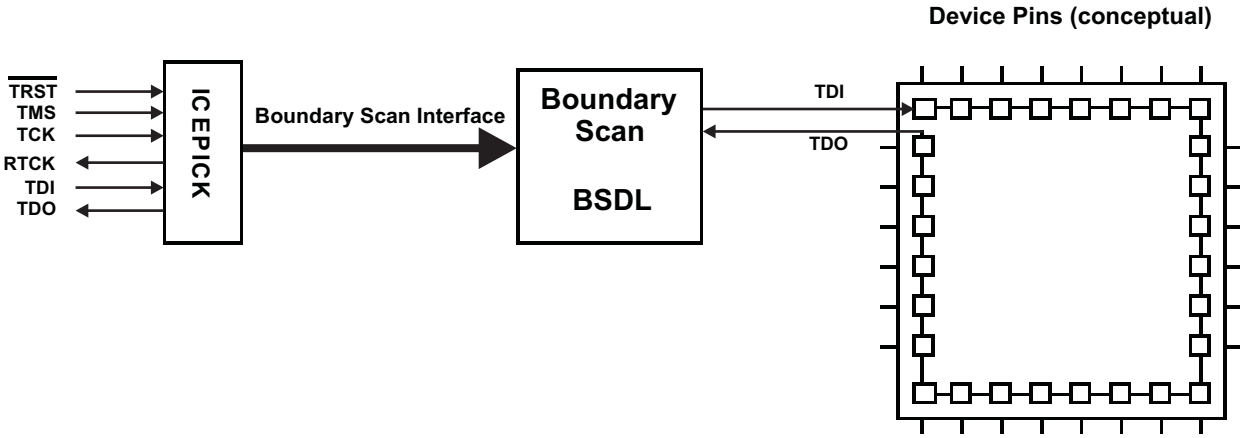

Figure 6-22. Boundary Scan Implementation (Conceptual Diagram)

Data is serially shifted into all boundary-scan buffers through TDI, and out through TDO.

7 Peripheral Information and Electrical Specifications

7.1 Enhanced Translator PWM Modules (ePWM)

Figure 7-1 illustrates the connections between the seven ePWM modules (ePWM1,2,3,4,5,6,7) on the device.

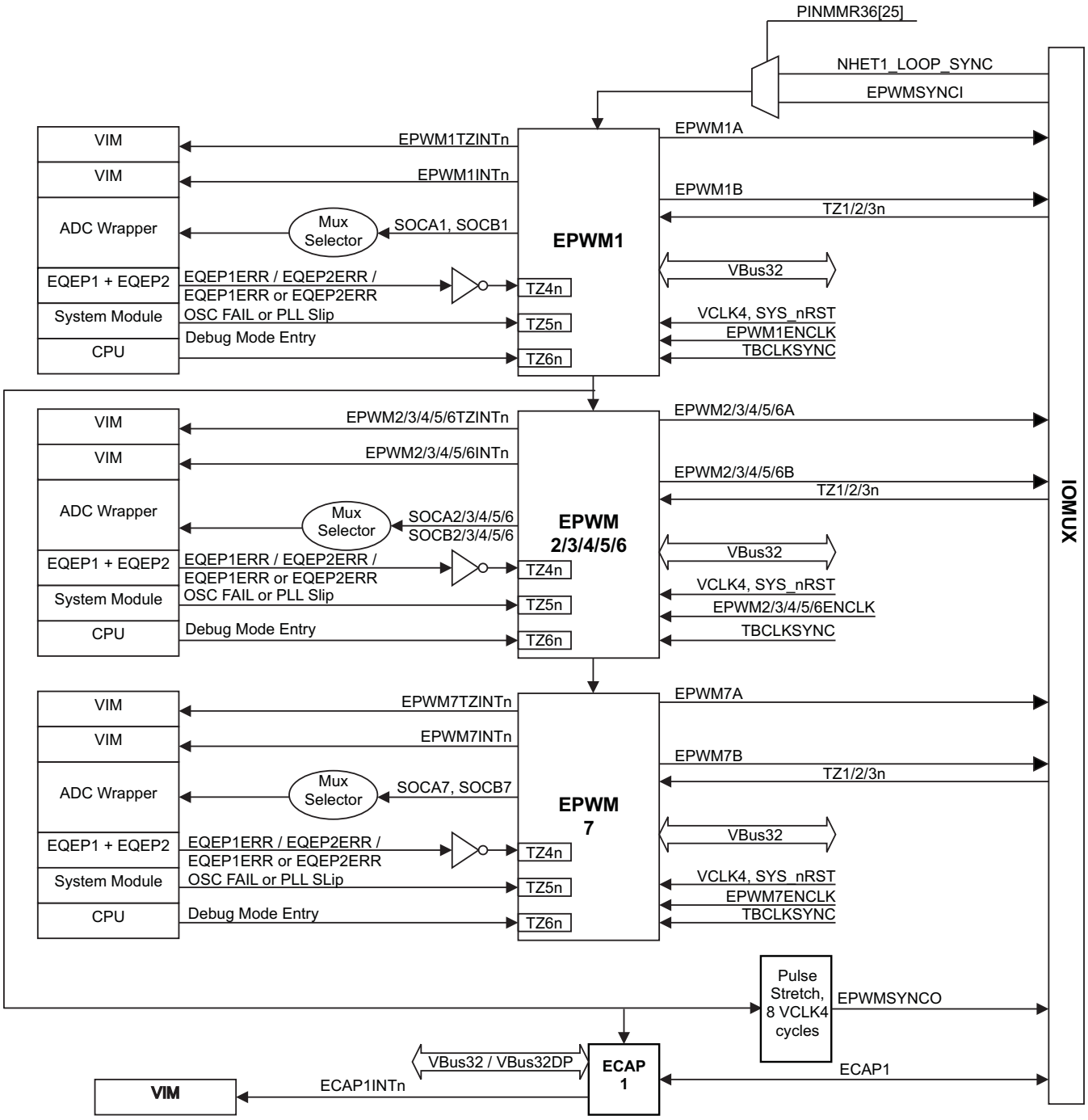

Figure 7-1. ePWMx Module Interconnections

Copyright © 2012–2015, Texas Instruments Incorporated

7.1.1 ePWM Clocking and Reset

Each ePWM module has a clock enable (EPWMxENCLK). When SYS_nRST is active low, the clock enables are ignored and the ePWM logic is clocked so that it can reset to a proper state. When SYS_nRST goes in-active high, the state of clock enable is respected.

Table 7-1. ePWMx Clock Enable Control

ePWM Module Instance	Control Register to Enable Clock	Default Value
ePWM1	PINMMR37[8]	1
ePWM2	PINMMR37[16]	1
ePWM3	PINMMR37[24]	1
ePWM4	PINMMR38[0]	1
ePWM5	PINMMR38[8]	1
ePWM6	PINMMR38[16]	1
ePWM7	PINMMR38[24]	1

The default value of the control registers to enable the clocks to the ePWMx modules is 1. This means that the VCLK4 clock connections to the ePWMx modules are enabled by default. The application can choose to gate off the VCLK4 clock to any ePWMx module individually by clearing the respective control register bit.

7.1.2 Synchronization of ePWMx Time Base Counters

A time-base synchronization scheme connects all of the ePWM modules on a device. Each ePWM module has a synchronization input (EPWMxSYNCI) and a synchronization output (EPWMxSYNCO). The input synchronization for the first instance (ePWM1) comes from an external pin. Figure 7-1 shows the synchronization connections for all the ePWMx modules. Each ePWM module can be configured to use or ignore the synchronization input. Refer to the ePWM chapter in the TMS570LS12x/11x Technical Reference Manual (SPNU515) for more information.

7.1.3 Synchronizing all ePWM Modules to the N2HET1 Module Time Base

The connection between the N2HET1_LOOP_SYNC and SYNCI input of ePWM1 module is implemented as shown in Figure 7-2.

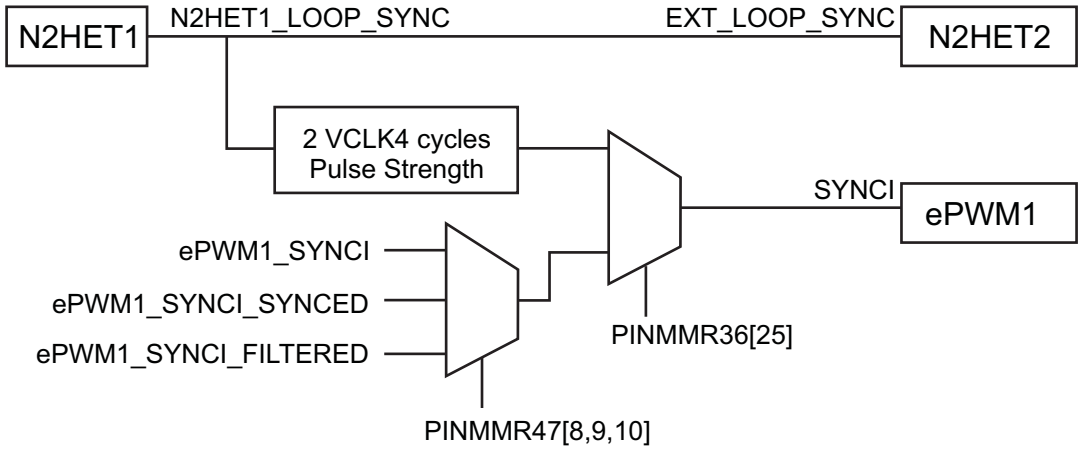

Figure 7-2. Synchronizing Time Bases Between N2HET1, N2HET2 and ePWMx Modules

7.1.4 Phase-Locking the Time-Base Clocks of Multiple ePWM Modules

The TBCLKSYNC bit can be used to globally synchronize the time-base clocks of all enabled ePWM modules on a device. This bit is implemented as PINMMR37 register bit 1.

When TBCLKSYNC = 0, the time-base clock of all ePWM modules is stopped. This is the default condition.

When TBCLKSYNC = 1, all ePWM time-base clocks are started with the rising edge of TBCLK aligned.

For perfectly synchronized TBCLKs, the prescaler bits in the TBCTL register of each ePWM module must be set identically. The proper procedure for enabling the ePWM clocks is as follows:

1. Enable the individual ePWM module clocks (if disable) using the control registers shown in Table 7-1.
2. Configure TBCLKSYNC = 0. This will stop the time-base clock within any enabled ePWM module.
3. Configure the prescaler values and desired ePWM modes.
4. Configure TBCLKSYNC = 1.

7.1.5 ePWM Synchronization with External Devices

The output sync from EPWM1 Module is also exported to a device output terminal so that multiple devices can be synchronized together. The signal pulse is stretched by eight VCLK4 cycles before being exported on the terminal as the EPWM1SYNCO signal.

7.1.6 ePWM Trip Zones

The ePWMx modules have six trip zone inputs each. These are active-low signals. The application can control the ePWMx module response to each of the trip zone input separately. The timing requirements from the assertion of the trip zone inputs to the actual response are specified in Section 7.1.8.

7.1.6.1 Trip Zones TZ1n, TZ2n, TZ3n

These three trip zone inputs are driven by external circuits and are connected to device-level inputs. These signals are either connected asynchronously to the ePWMx trip zone inputs, or double-synchronized with VCLK4, or double-synchronized and then filtered with a 6-cycle VCLK4-based counter before connecting to the ePWMx. By default, the trip zone inputs are asynchronously connected to the ePWMx modules.

Table 7-2. Connection to ePWMx Modules for Device-Level Trip Zone Inputs

Trip Zone Input	Control for Asynchronous Connection to ePWMx	Control for Double-Synchronized Connection to ePWMx	Control for Double-Synchronized and Filtered Connection to ePWMx
TZ1n	PINMMR46[16] = 1	PINMMR46[16] = 0 AND PINMMR46[17] = 1	PINMMR46[16] = 0 AND PINMMR46[17] = 0 AND PINMMR46[18] = 1
TZ2n	PINMMR46[24] = 1	PINMMR46[24] = 0 AND PINMMR46[25] = 1	PINMMR46[24] = 0 AND PINMMR46[25] = 0 AND PINMMR46[26] = 1
TZ3n	PINMMR47[0] = 1	PINMMR47[0] = 0 AND PINMMR47[1] = 1	PINMMR47[0] = 0 AND PINMMR47[1] = 0 AND PINMMR47[2] = 1

7.1.6.2 Trip Zone TZ4n

This trip zone input is dedicated to eQEPx error indications. There are two eQEP modules on this device. Each eQEP module indicates a phase error by driving its EQEPxERR output High. The following control registers allow the application to configure the trip zone input (TZ4n) to each ePWMx module based on the application's requirements.

Copyright © 2012–2015, Texas Instruments Incorporated

Table 7-3. TZ4n Connections for ePWMx Modules

ePWMx	Control for TZ4n = not(EQEP1ERR OR EQEP2ERR)	Control for TZ4n = not(EQEP1ERR)	Control for TZ4n = not(EQEP2ERR)
ePWM1	PINMMR41[0] = 1	PINMMR41[0] = 0 AND PINMMR41[1] = 1	PINMMR41[0] = 1 AND PINMMR41[1] = 0 AND PINMMR41[2] = 1
ePWM2	PINMMR41[8]	PINMMR41[8] = 0 AND PINMMR41[9] = 1	PINMMR41[8] = 1 AND PINMMR41[9] = 0 AND PINMMR41[10] = 1
ePWM3	PINMMR41[16]	PINMMR41[16] = 0 AND PINMMR41[17] = 1	PINMMR41[16] = 1 AND PINMMR41[17] = 0 AND PINMMR41[18] = 1
ePWM4	PINMMR41[24]	PINMMR41[24] = 0 AND PINMMR41[25] = 1	PINMMR41[24] = 1 AND PINMMR41[25] = 0 AND PINMMR41[26] = 1
ePWM5	PINMMR42[0]	PINMMR42[0] = 0 AND PINMMR42[1] = 1	PINMMR42[0] = 1 AND PINMMR42[1] = 0 AND PINMMR42[2] = 1
ePWM6	PINMMR42[8]	PINMMR42[8] = 0 AND PINMMR42[9] = 1	PINMMR42[8] = 1 AND PINMMR42[9] = 0 AND PINMMR42[10] = 1
ePWM7	PINMMR42[16]	PINMMR42[16] = 0 AND PINMMR42[17] = 1	PINMMR42[16] = 1 AND PINMMR42[17] = 0 AND PINMMR42[18] = 1

7.1.6.3 Trip Zone TZ5n

This trip zone input is dedicated to a clock failure on the device. That is, this trip zone input is asserted whenever an oscillator failure or a PLL slip is detected on the device. The application can use this trip zone input for each ePWMx module in order to prevent the external system from going out of control when the device clocks are not within expected range (system running at limp clock).

The oscillator failure and PLL slip signals used for this trip zone input are taken from the status flags in the system module. These are level signals are set until cleared by the application.

7.1.6.4 Trip Zone TZ6n

This trip zone input to the ePWMx modules is dedicated to a debug mode entry of the CPU. If enabled, the user can force the PWM outputs to a known state when the emulator stops the CPU. This prevents the external system from going out of control when the CPU is stopped.

7.1.7 Triggering of ADC Start of Conversion Using ePWMx SOCA and SOCB Outputs

A special scheme is implemented in order to select the actual signal used for triggering the start of conversion on the two ADCs on this device. This scheme is defined in Section 7.4.2.3.

7.1.8 Enhanced Translator-Pulse Width Modulator (ePWMx) Timings

Table 7-4. ePWMx Timing Requirements

PARAMETER		TEST CONDITIONS	MIN	MAX	UNIT
$t_{w(SYNCIN)}$	Synchronization input pulse width	Asynchronous	2 $t_{c(VCLK4)}$		cycles
		Synchronous	2 $t_{c(VCLK4)}$		cycles
		Synchronous, with input filter	2 $t_{c(VCLK4)}$ + filter width		cycles

Table 7-5. ePWMx Switching Characteristics

PARAMETER		TEST CONDITIONS	MIN	MAX	UNIT
$t_{w(PWM)}$	Pulse duration, ePWMx output high or low		33.33		ns
$t_{w(SYNCOUT)}$	Synchronization Output Pulse Width		8 $t_{c(VCLK4)}$		cycles
$t_{d(PWM)tza}$	Delay time, trip input active to PWM forced high, OR Delay time, trip input active to PWM forced low	no pin load		25	ns

Table 7-5. ePWMx Switching Characteristics (continued)

PARAMETER		TEST CONDITIONS	MIN	MAX	UNIT
$t_{d(TZ-PWM)HZ}$	Delay time, trip input active to PWM Hi-Z			20	ns

Table 7-6. ePWMx Trip-Zone Timing Requirements

PARAMETER		TEST CONDITIONS	MIN	MAX	UNIT
$t_{w(TZ)}$	Pulse duration, TZn input low	Asynchronous	2 * HSPCLKDIV * CLKDIV * $t_{c(VCLK4)}$ (1)		ns
		Synchronous	2 $t_{c(VCLK4)}$		ns
		Synchronous, with input filter	8 $t_{c(VCLK4)}$		ns

(1) Refer to the ePWM chapter of the TMS570LS12x/11x Technical Reference Manual (SPNU515) for more information on the clock divider fields HSPCLKDIV and CLKDIV.

Copyright © 2012–2015, Texas Instruments Incorporated

7.2 Enhanced Capture Modules (eCAP)

Figure 7-3 shows how the eCAP modules are interconnected on this microcontroller.

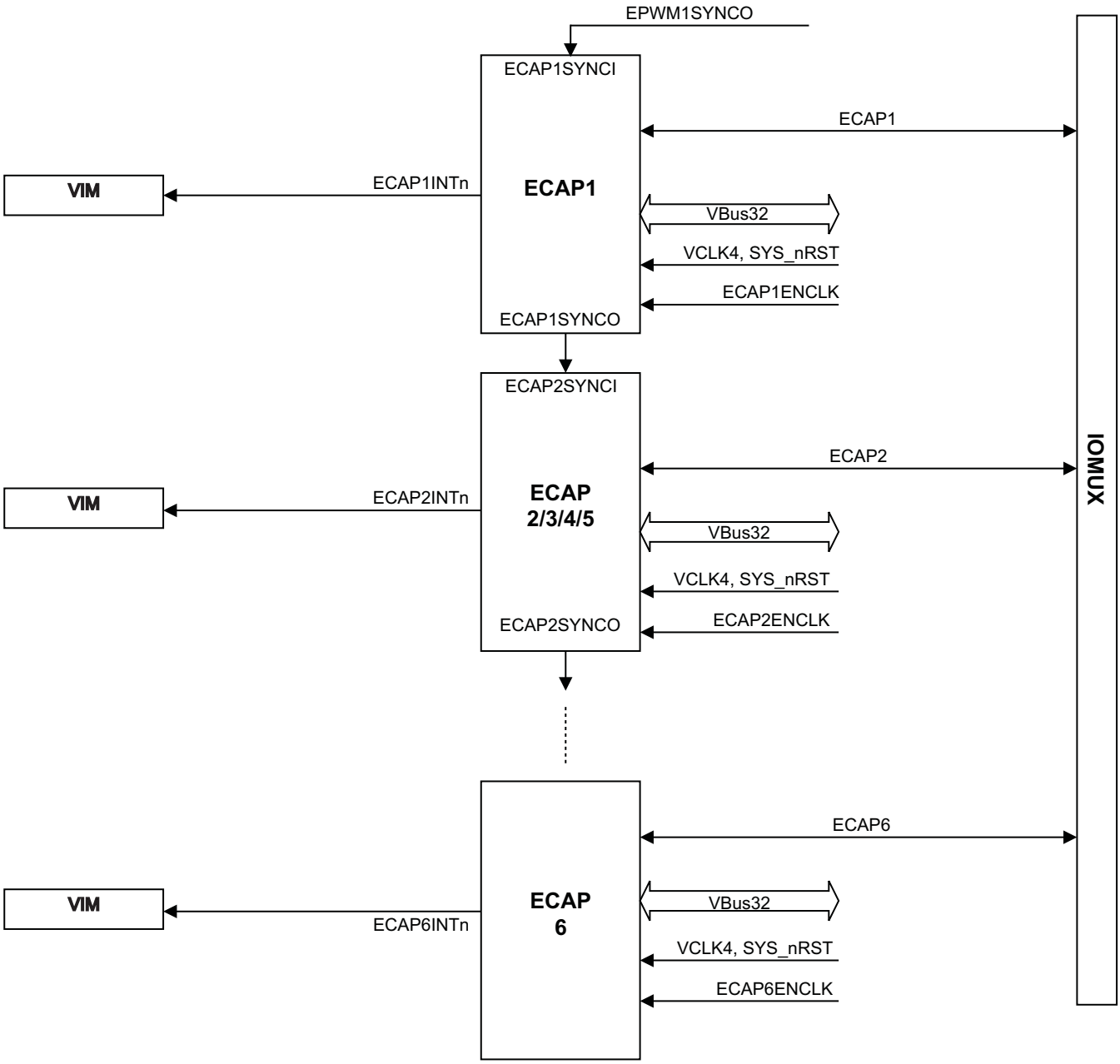

Figure 7-3. eCAP Module Connections

7.2.1 Clock Enable Control for eCAPx Modules

Each of the ECAPx modules have a clock enable (ECAPxENCLK). These signals need to be generated from a device-level control register. When SYS_nRST is active low, the clock enables are ignored and the ECAPx logic is clocked so that it can reset to a proper state. When SYS_nRST goes in-active high, the state of clock enable is respected.

Table 7-7. eCAPx Clock Enable Control

ePWM Module Instance	Control Register to Enable Clock	Default Value
eCAP1	PINMMR39[0]	1
eCAP2	PINMMR39[8]	1
eCAP3	PINMMR39[16]	1
eCAP4	PINMMR39[24]	1
eCAP5	PINMMR40[0]	1
eCAP6	PINMMR40[8]	1

The default value of the control registers to enable the clocks to the eCAPx modules is 1. This means that the VCLK4 clock connections to the eCAPx modules are enabled by default. The application can choose to gate off the VCLK4 clock to any eCAPx module individually by clearing the respective control register bit.

7.2.2 PWM Output Capability of eCAPx

When not used in capture mode, each of the eCAPx modules can be used as a single-channel PWM output. This is called the auxiliary PWM (APWM) mode of operation of the eCAP modules. Refer to the eCAP chapter of the TMS570LS12x/11x Technical Reference Manual (SPNU515) for more information.

7.2.3 Input Connection to eCAPx Modules

The input connection to each of the eCAP modules can be selected between a double-VCLK4-synchronized input or a double-VCLK4-synchronized and filtered input, as shown in Table 7-8.

Table 7-8. Device-Level Input Connection to eCAPx Modules

Input Signal	Control for Double-Synchronized Connection to eCAPx	Control for Double-Synchronized and Filtered Connection to eCAPx
eCAP1	PINMMR43[0] = 1	PINMMR43[0] = 0 AND PINMMR43[1] = 1
eCAP2	PINMMR43[8] = 1	PINMMR43[8] = 0 AND PINMMR43[9] = 1
eCAP3	PINMMR43[16] = 1	PINMMR43[16] = 0 AND PINMMR43[17] = 1
eCAP4	PINMMR43[24] = 1	PINMMR43[24] = 0 AND PINMMR43[25] = 1
eCAP5	PINMMR44[0] = 1	PINMMR44[0] = 0 AND PINMMR44[1] = 1
eCAP6	PINMMR44[8] = 1	PINMMR44[8] = 0 AND PINMMR44[9] = 1

7.2.4 Enhanced Capture Module (eCAP) Timings

Table 7-9. eCAPx Timing Requirements

PARAMETER		TEST CONDITIONS	MIN	MAX	UNIT
$t_{w(CAP)}$	Capture input pulse width	Synchronous	2 $t_{c(VCLK4)}$		cycles
		Synchronous, with input filter	2 $t_{c(VCLK4)}$ + filter width		cycles

Table 7-10. eCAPx Switching Characteristics

PARAMETER		TEST CONDITIONS	MIN	MAX	UNIT
$t_{w(APWM)}$	Pulse duration, APWMx output high or low		20		ns

Copyright © 2012–2015, Texas Instruments Incorporated

7.3 Enhanced Quadrature Encoder (eQEP)

Figure 7-4 shows the eQEP module interconnections on the device.

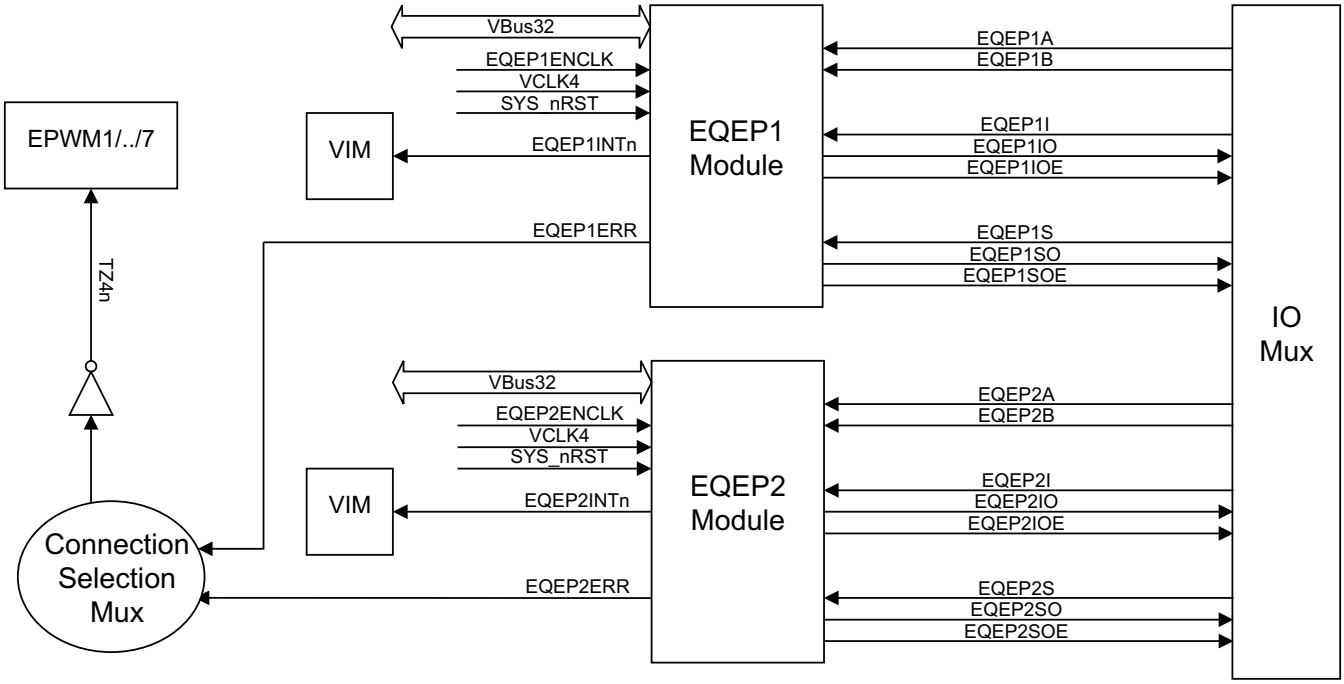

Figure 7-4. eQEP Module Interconnections

7.3.1 Clock Enable Control for eQEPx Modules

Device-level control registers are implemented to generate the EQEPxENCLK signals. When SYS_nRST is active low, the clock enables are ignored and the eQEPx logic is clocked so that it can reset to a proper state. When SYS_nRST goes in-active high, the state of clock enable is respected.

Table 7-11. eQEPx Clock Enable Control

ePWM Module Instance	Control Register to Enable Clock	Default Value
eQEP1	PINMMR40[16]	1
eQEP2	PINMMR40[24]	1

The default value of the control registers to enable the clocks to the eQEPx modules is 1. This means that the VCLK4 clock connections to the eQEPx modules are enabled by default. The application can choose to gate off the VCLK4 clock to any eQEPx module individually by clearing the respective control register bit.

7.3.2 Using eQEPx Phase Error to Trip ePWMx Outputs

The eQEP module sets the EQEPERR signal output whenever a phase error is detected in its inputs EQEPxA and EQEPxB. This error signal from both the eQEP modules is input to the connection selection multiplexor. This multiplexor is defined in Table 7-3. As shown in Figure 7-1, the output of this selection multiplexor is inverted and connected to the TZ4n trip-zone input of all EPWMx modules. This connection allows the application to define the response of each ePWMx module on a phase error indicated by the eQEP modules.

7.3.3 Input Connections to eQEPx Modules

The input connections to each of the eQEP modules can be selected between a double-VCLK4-synchronized input or a double-VCLK4-synchronized and filtered input, as shown in Table 7-12.

Table 7-12. Device-Level Input Connection to eCAPx Modules

Input Signal	Control for Double-Synchronized Connection to eQEPx	Control for Double-Synchronized and Filtered Connection to eQEPx
eQEP1A	PINMMR44[16] = 1	PINMMR44[16] = 0 and PINMMR44[17] = 1
eQEP1B	PINMMR44[24] = 1	PINMMR44[24] = 0 and PINMMR44[25] = 1
eQEP1I	PINMMR45[0] = 1	PINMMR45[0] = 0 and PINMMR45[1] = 1
eQEP1S	PINMMR45[8] = 1	PINMMR45[8] = 0 and PINMMR45[9] = 1
eQEP2A	PINMMR45[16] = 1	PINMMR45[16] = 0 and PINMMR45[17] = 1
eQEP2B	PINMMR45[24] = 1	PINMMR45[24] = 0 and PINMMR45[25] = 1
eQEP2I	PINMMR46[0] = 1	PINMMR46[0] = 0 and PINMMR46[1] = 1
eQEP2S	PINMMR46[8] = 1	PINMMR46[8] = 0 and PINMMR46[9] = 1

7.3.4 Enhanced Quadrature Encoder Pulse (eQEPx) Timing

Table 7-13. eQEPx Timing Requirements

PARAMETER		TEST CONDITIONS	MIN	MAX	UNIT
$t_{w(QEPP)}$	QEP input period	Synchronous	2 $t_{c(VCLK4)}$		cycles
		Synchronous, with input filter	2 $t_{c(VCLK4)}$ + filter width		cycles
$t_{w(INDEXH)}$	QEP Index Input High Time	Synchronous	2 $t_{c(VCLK4)}$		cycles
		Synchronous, with input filter	2 $t_{c(VCLK4)}$ + filter width		cycles
$t_{w(INDEXL)}$	QEP Index Input Low Time	Synchronous	2 $t_{c(VCLK4)}$		cycles
		Synchronous, with input filter	2 $t_{c(VCLK4)}$ + filter width		cycles
$t_{w(STROBH)}$	QEP Strobe Input High Time	Synchronous	2 $t_{c(VCLK4)}$		cycles
		Synchronous, with input filter	2 $t_{c(VCLK4)}$ + filter width		cycles
$t_{w(STROBL)}$	QEP Strobe Input Low Time	Synchronous	2 $t_{c(VCLK4)}$		cycles
		Synchronous, with input filter	2 $t_{c(VCLK4)}$ + filter width		cycles

Table 7-14. eQEPx Switching Characteristics

PARAMETER		MIN	MAX	UNIT
$t_{d(CNTR)xin}$	Delay time, external clock to counter increment		4 $t_{c(VCLK4)}$	cycles
$t_{d(PCS\text{-}OUT)QEP}$	Delay time, QEP input edge to position compare sync output		6 $t_{c(VCLK4)}$	cycles

7.4 Multibuffered 12bit Analog-to-Digital Converter

The multibuffered A-to-D converter (MibADC) has a separate power bus for its analog circuitry that enhances the A-to-D performance by preventing digital switching noise on the logic circuitry which could be present on V_{SS} and V_{CC} from coupling into the A-to-D analog stage. All A-to-D specifications are given with respect to AD_{REFLO} unless otherwise noted.

Table 7-15. MibADC Overview

Description	Value
Resolution	12 bits
Monotonic	Assured
Output conversion code	00h to 3FFh [00 for $V_{AI} \le AD_{REFLO}$; 3FFh for $V_{AI} \ge AD_{REFHI}$]

Copyright © 2012–2015, Texas Instruments Incorporated

7.4.1 Features

- 12-bit resolution
- AD_{REFHI} and AD_{REFLO} pins (high and low reference voltages)
- Total Sample/Hold/Convert time: 600ns Minimum at 30MHz ADCLK
- One memory region per conversion group is available (event, group 1, group 2)
- Allocation of channels to conversion groups is completely programmable
- Supports flexible channel conversion order
- Memory regions are serviced either by interrupt or by DMA
- Programmable interrupt threshold counter is available for each group
- Programmable magnitude threshold interrupt for each group for any one channel
- Option to read either 8-bit, 10-bit or 12-bit values from memory regions
- Single or continuous conversion modes
- Embedded self-test
- Embedded calibration logic
- Enhanced power-down mode
  - Optional feature to automatically power down ADC core when no conversion is in progress
- External event pin (ADxEVT) programmable as general-purpose I/O

7.4.2 Event Trigger Options

The ADC module supports 3 conversion groups: Event Group, Group1 and Group2. Each of these 3 groups can be configured to be hardware event-triggered. In that case, the application can select from among 8 event sources to be the trigger for a group's conversions.

7.4.2.1 MIBADC1 Event Trigger Hookup

Table 7-16. MIBADC1 Event Trigger Hookup

Group Source Select, G1SRC, G2SRC or EVSRC	Event #	Trigger Event Signal				
		PINMMR30[0] = 1 (default)	PINMMR30[0] = 0 and PINMMR30[1] = 1			
			Option A	Control for Option A	Option B	Control for Option B
000	1	AD1EVT	AD1EVT	—	AD1EVT	—
001	2	N2HET1[8]	N2HET2[5]	PINMMR30[8] = 1	ePWM_B	PINMMR30[8] = 0 and PINMMR30[9] = 1
010	3	N2HET1[10]	N2HET1[27]	—	N2HET1[27]	—
011	4	RTI Compare 0 Interrupt	RTI Compare 0 Interrupt	PINMMR30[16] = 1	ePWM_A1	PINMMR30[16] = 0 and PINMMR30[17] = 1
100	5	N2HET1[12]	N2HET1[17]	—	N2HET1[17]	—
101	6	N2HET1[14]	N2HET1[19]	PINMMR30[24] = 1	N2HET2[1]	PINMMR30[24] = 0 and PINMMR30[25] = 1
110	7	GIOB[0]	N2HET1[11]	PINMMR31[0] = 1	ePWM_A2	PINMMR31[0] = 0 and PINMMR31[1] = 1
111	8	GIOB[1]	N2HET2[13]	PINMMR32[16] = 1	ePWM_AB	PINMMR31[8] = 0 and PINMMR31[9] = 1

NOTE

If ADEVT, N2HET1 or GIOB is used as a trigger source, the connection to the MibADC1 module trigger input is made from the output side of the input buffer. This way, a trigger condition can be generated either by configuring the function as output onto the pad (through the mux control), or by driving the function from an external trigger source as input. If the mux control module is used to select different functionality instead of the ADEVT, N2HET1[x] or GIOB[x] signals, then care must be taken to disable these signals from triggering conversions; there is no multiplexing on the input connections.

If N2HET2[1], N2HET2[5], N2HET2[13], N2HET1[11], N2HET1[17] or N2HET1[19] is used to trigger the ADC the connection to the ADC is made directly from the N2HET module outputs. As a result, the ADC can be triggered without having to enable the signal from being output on a device terminal.

NOTE

For the RTI compare 0 interrupt source, the connection is made directly from the output of the RTI module. That is, the interrupt condition can be used as a trigger source even if the actual interrupt is not signaled to the CPU.

7.4.2.2 MIBADC2 Event Trigger Hookup

Table 7-17. MIBADC2 Event Trigger Hookup

Group Source Select, G1SRC, G2SRC or EVSRC	Event #	Trigger Event Signal				
		PINMMR30[0] = 1 (default)	PINMMR30[0] = 0 and PINMMR30[1] = 1			
			Option A	Control for Option A	Option B	Control for Option B
000	1	AD2EVT	AD2EVT	—	AD2EVT	—
001	2	N2HET1[8]	N2HET2[5]	PINMMR31[16] = 1	ePWM_B	PINMMR31[16] = 0 and PINMMR31[17] = 1
010	3	N2HET1[10]	N2HET1[27]	—	N2HET1[27]	—
011	4	RTI Compare 0 Interrupt	RTI Compare 0 Interrupt	PINMMR31[24] = 1	ePWM_A1	PINMMR31[24] = 0 and PINMMR31[25] = 1
100	5	N2HET1[12]	N2HET1[17]	—	N2HET1[17]	—
101	6	N2HET1[14]	N2HET1[19]	PINMMR32[0] = 1	N2HET2[1]	PINMMR32[0] = 0 and PINMMR32[1] = 1
110	7	GIOB[0]	N2HET1[11]	PINMMR32[8] = 1	ePWM_A2	PINMMR32[8] = 0 and PINMMR32[9] = 1
111	8	GIOB[1]	N2HET2[13]	PINMMR32[16] = 1	ePWM_AB	PINMMR32[16] = 0 and PINMMR32[17] = 1

Copyright © 2012–2015, Texas Instruments Incorporated

NOTE

If AD2EVT, N2HET1 or GIOB is used as a trigger source, the connection to the MibADC2 module trigger input is made from the output side of the input buffer. This way, a trigger condition can be generated either by configuring the function as output onto the pad (through the mux control), or by driving the function from an external trigger source as input. If the mux control module is used to select different functionality instead of the AD2EVT, N2HET1[x] or GIOB[x] signals, then care must be taken to disable these signals from triggering conversions; there is no multiplexing on the input connections.

If N2HET2[5], N2HET2[1], N2HET2[13], N2HET1[11], N2HET1[17] or N2HET1[19] is used to trigger the ADC the connection to the ADC is made directly from the N2HET module outputs. As a result, the ADC can be triggered without having to enable the signal from being output on a device terminal.

NOTE

For the RTI compare 0 interrupt source, the connection is made directly from the output of the RTI module. That is, the interrupt condition can be used as a trigger source even if the actual interrupt is not signaled to the CPU.

7.4.2.3 Controlling ADC1 and ADC2 Event Trigger Options Using SOC Output from ePWM Modules

As shown in Figure 7-5, the ePWMxSOCA and ePWMxSOCB outputs from each ePWM module are used to generate 4 signals – ePWM_B, ePWM_A1, ePWM_A2 and ePWM_AB, that are available to trigger the ADC based on the application requirement.

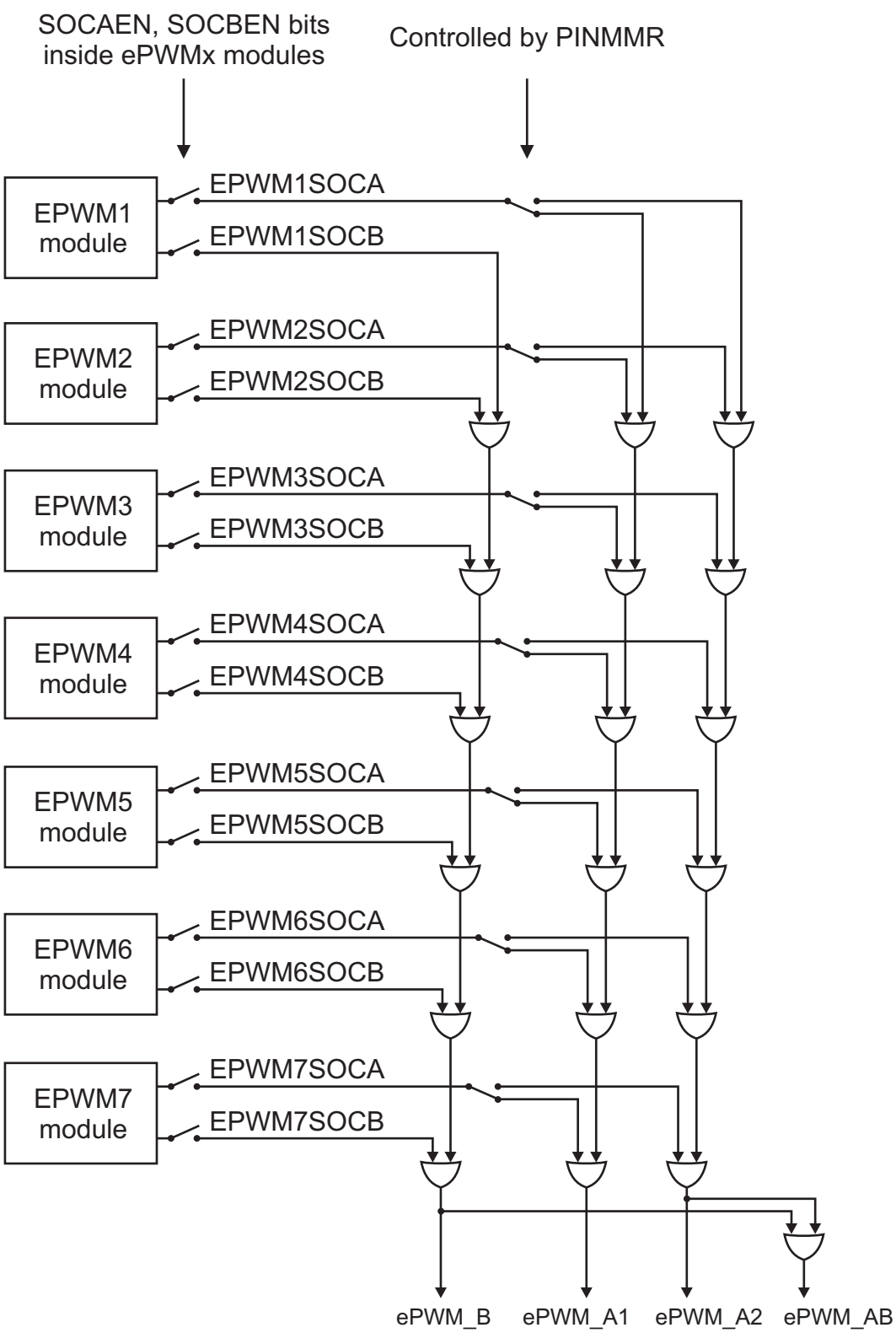

Figure 7-5. ADC Trigger Source Generation from ePWMx

Copyright © 2012–2015, Texas Instruments Incorporated

Table 7-18. Control Bit to SOC Output

Control Bit	SOC Output
PINMMR35[0]	SOC1A_SEL
PINMMR35[8]	SOC2A_SEL
PINMMR35[16]	SOC3A_SEL
PINMMR35[24]	SOC4A_SEL
PINMMR36[0]	SOC5A_SEL
PINMMR36[8]	SOC6A_SEL
PINMMR36[16]	SOC7A_SEL

The SOCA output from each ePWM module is connected to a "switch" shown in Figure 7-5.

The logic equations for the 4 outputs from the combinational logic shown in Figure 7-5 are:

ePWM_B = SOC1B or SOC2B or SOC3B or SOC4B or SOC5B or SOC6B or SOC7B

ePWM_A1 = [SOC1A and not(SOC1A_SEL)] or [SOC2A and not(SOC2A_SEL)] or [SOC3A and not(SOC3A_SEL)] or [SOC4A and not(SOC4A_SEL)] or [SOC5A and not(SOC5A_SEL)] or [SOC6A and not(SOC6A_SEL)] or [SOC7A and not(SOC7A_SEL)]

ePWM_A2 = [SOC1A and SOC1A_SEL] or [SOC2A and SOC2A_SEL] or [SOC3A and SOC3A_SEL] or [SOC4A and SOC4A_SEL] or [SOC5A and SOC5A_SEL] or [SOC6A and SOC6A_SEL] or [SOC7A and SOC7A_SEL]

ePWM_AB = ePWM_B or ePWM_A2

7.4.3 ADC Electrical and Timing Specifications

Table 7-19. MibADC Recommended Operating Conditions

Parameter		MIN	MAX	Unit
AD_{REFHI}	A-to-D high-voltage reference source	AD_{REFLO}	V_{CCAD} (1)	V
AD_{REFLO}	A-to-D low-voltage reference source	V_{SSAD} (1)	AD_{REFHI}	V
V_{AI}	Analog input voltage	AD_{REFLO}	AD_{REFHI}	V
I_{AIK}	Analog input clamp current (2) ($V_{AI} < V_{SSAD} – 0.3$ or $V_{AI} > V_{CCAD} + 0.3$)	- 2	2	mA

(1) For V_{CCAD} and V_{SSAD} recommended operating conditions, see Section 5.4.
(2) Input currents into any ADC input channel outside the specified limits could affect conversion results of other channels.

Table 7-20. MibADC Electrical Characteristics Over Full Ranges of Recommended Operating Conditions

Parameter		Description/Conditions		MIN	Nom	MAX	Unit
R_{mux}	Analog input mux on-resistance	See Figure 7-6				250	Ω
R_{samp}	ADC sample switch on-resistance	See Figure 7-6				250	Ω
C_{mux}	Input mux capacitance	See Figure 7-6				16	pF
C_{samp}	ADC sample capacitance	See Figure 7-6				13	pF
I_{AIL}	Analog off-state input leakage current	V_{CCAD} = 3.6V maximum	$V_{SSAD} \le V_{IN} < V_{SSAD}$ + 100mV	-300		200	nA
			V_{SSAD} + 100mV $\le V_{IN} \le V_{CCAD}$ - 200mV	-200		200	nA
			V_{CCAD} - 200mV $< V_{IN} \le V_{CCAD}$	-200		500	nA
I_{AIL}	Analog off-state input leakage current	V_{CCAD} = 5.5V maximum	$V_{SSAD} \le V_{IN} < V_{SSAD}$ + 300mV	-1000		250	nA
			V_{SSAD} + 300mV $\le V_{IN} \le V_{CCAD}$ - 300mV	-250		250	nA
			V_{CCAD} - 300mV $< V_{IN} \le V_{CCAD}$	-250		1000	nA
I_{AOSB1} (1)	ADC1 Analog on-state input bias current	V_{CCAD} = 3.6V maximum	$V_{SSAD} \le V_{IN} < V_{SSAD}$ + 100mV	-8		2	µA
			V_{SSAD} + 100mV $< V_{IN} < V_{CCAD}$ - 200mV	-4		2	µA
			V_{CCAD} - 200mV $< V_{IN} < V_{CCAD}$	-4		12	µA
I_{AOSB2} (1)	ADC2 Analog on-state input bias current	V_{CCAD} = 3.6V maximum	$V_{SSAD} \le V_{IN} < V_{SSAD}$ + 100mV	-7		2	µA
			V_{SSAD} + 100mV $\le V_{IN} \le V_{CCAD}$ - 200mV	-4		2	µA
			V_{CCAD} - 200mV $< V_{IN} \le V_{CCAD}$	-4		10	µA
I_{AOSB1} (1)	ADC1 Analog on-state input bias current	V_{CCAD} = 5.5V maximum	$V_{SSAD} \le V_{IN} < V_{SSAD}$ + 300mV	-10		3	µA
			V_{SSAD} + 300mV $\le V_{IN} \le V_{CCAD}$ - 300mV	-5		3	µA
			V_{CCAD} - 300mV $< V_{IN} \le V_{CCAD}$	-5		14	µA
I_{AOSB2} (1)	ADC2 Analog on-state input bias current	V_{CCAD} = 5.5V maximum	$V_{SSAD} \le V_{IN} < V_{SSAD}$ + 300mV	-8		3	µA
			V_{SSAD} + 300mV $\le V_{IN} \le V_{CCAD}$ - 300mV	-5		3	µA
			V_{CCAD} - 300mV $< V_{IN} \le V_{CCAD}$	-5		12	µA
$I_{ADREFHI}$	AD_{REFHI} input current	$AD_{REFHI} = V_{CCAD}$, $AD_{REFLO} = V_{SSAD}$				3	mA
I_{CCAD}	Static supply current	Normal operating mode				15	mA
		ADC core in power down mode				5	µA

(1) If a shared channel is being converted by both ADC converters at the same time, the on-state leakage is equal to $I_{AOSB1} + I_{AOSB2}$

Copyright © 2012–2015, Texas Instruments Incorporated

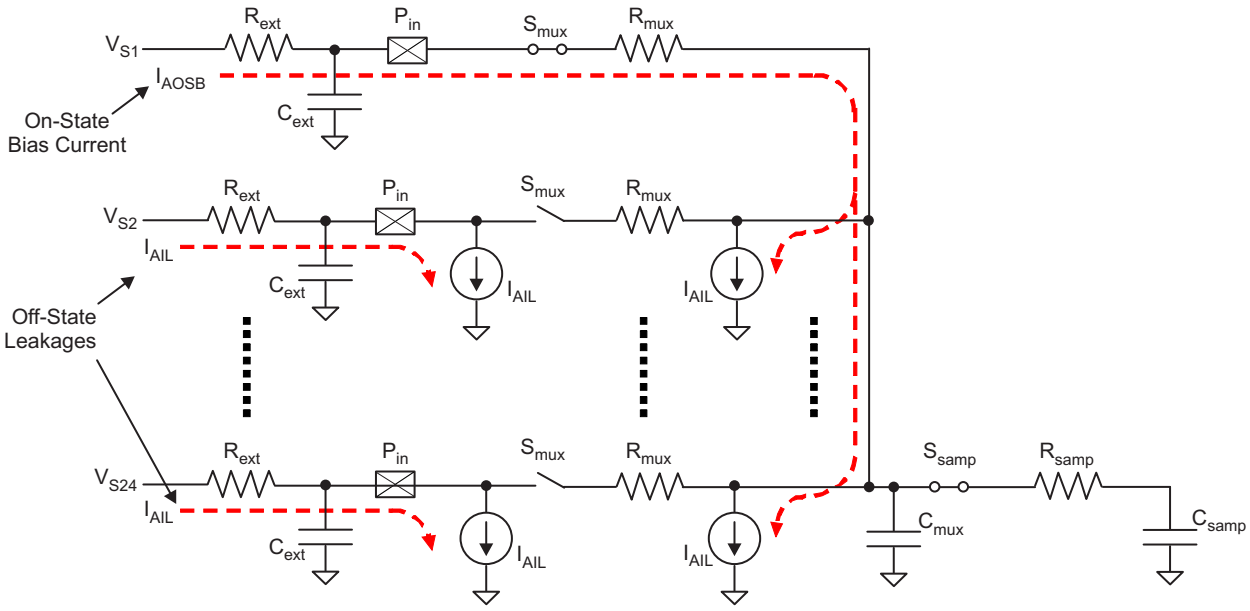

Figure 7-6. MibADC Input Equivalent Circuit

Table 7-21. MibADC Timing Specifications

Parameter		MIN	NOM	MAX	Unit
$t_{c(ADCLK)}$ (1)	Cycle time, MibADC clock	0.033			µs
$t_{d(SH)}$ (2)	Delay time, sample and hold time	0.2			µs
$t_{d(PU-ADV)}$	Delay time from ADC power on until first input can be sampled	1			µs
12-bit mode					
$t_{d©)}$	Delay time, conversion time	0.4			µs
$t_{d(SHC)}$ (3)	Delay time, total sample/hold and conversion time	0.6			µs
10-bit mode					
$t_{d©)}$	Delay time, conversion time	0.33			µs
$t_{d(SHC)}$ (3)	Delay time, total sample/hold and conversion time	0.53			µs

(1) The MibADC clock is the ADCLK, generated by dividing down the VCLK by a prescale factor defined by the ADCLOCKCR register bits 4:0.
(2) The sample and hold time for the ADC conversions is defined by the ADCLK frequency and the AD<GP>SAMP register for each conversion group. The sample time needs to be determined by accounting for the external impedance connected to the input channel as well as the ADC's internal impedance.
(3) This is the minimum sample/hold and conversion time that can be achieved. These parameters are dependent on many factors, for example, the prescale settings.

Table 7-22. MibADC Operating Characteristics Over Full Ranges of Recommended Operating Conditions(1)(2)

Parameter		Description/Conditions		MIN	Type	MAX	Unit
CR	Conversion range over which specified accuracy is maintained	AD_{REFHI} - AD_{REFLO}		3		5.5	V
Z_{SET}	Zero Scale Offset	Difference between the first ideal transition (from code 000h to 001h) and the actual transition	10-bit mode			1	LSB
			12-bit mode			2	LSB
F_{SET}	Full Scale Offset	Difference between the range of the measured code transitions (from first to last) and the range of the ideal code transitions	10-bit mode			2	LSB
			12-bit mode			3	LSB
E_{DNL}	Differential nonlinearity error	Difference between the actual step width and the ideal value. (See Figure 7-7)	10-bit mode			± 1.5	LSB
			12-bit mode			± 2	LSB
E_{INL}	Integral nonlinearity error	Maximum deviation from the best straight line through the MibADC. MibADC transfer characteristics, excluding the quantization error.	10-bit mode			± 2	LSB
			12-bit mode			± 2	LSB
E_{TOT}	Total unadjusted error	Maximum value of the difference between an analog value and the ideal midstep value.	10-bit mode			± 2	LSB
			12-bit mode			± 4	LSB

(1) 1 LSB = $(AD_{REFHI} – AD_{REFLO})/ 2^{12}$ for 12-bit mode
(2) 1 LSB = $(AD_{REFHI} – AD_{REFLO})/ 2^{10}$ for 10-bit mode

Copyright © 2012–2015, Texas Instruments Incorporated

7.4.4 Performance (Accuracy) Specifications

7.4.4.1 MibADC Nonlinearity Errors

The differential nonlinearity error shown in Figure 7-7 (sometimes referred to as differential linearity) is the difference between an actual step width and the ideal value of 1 LSB.

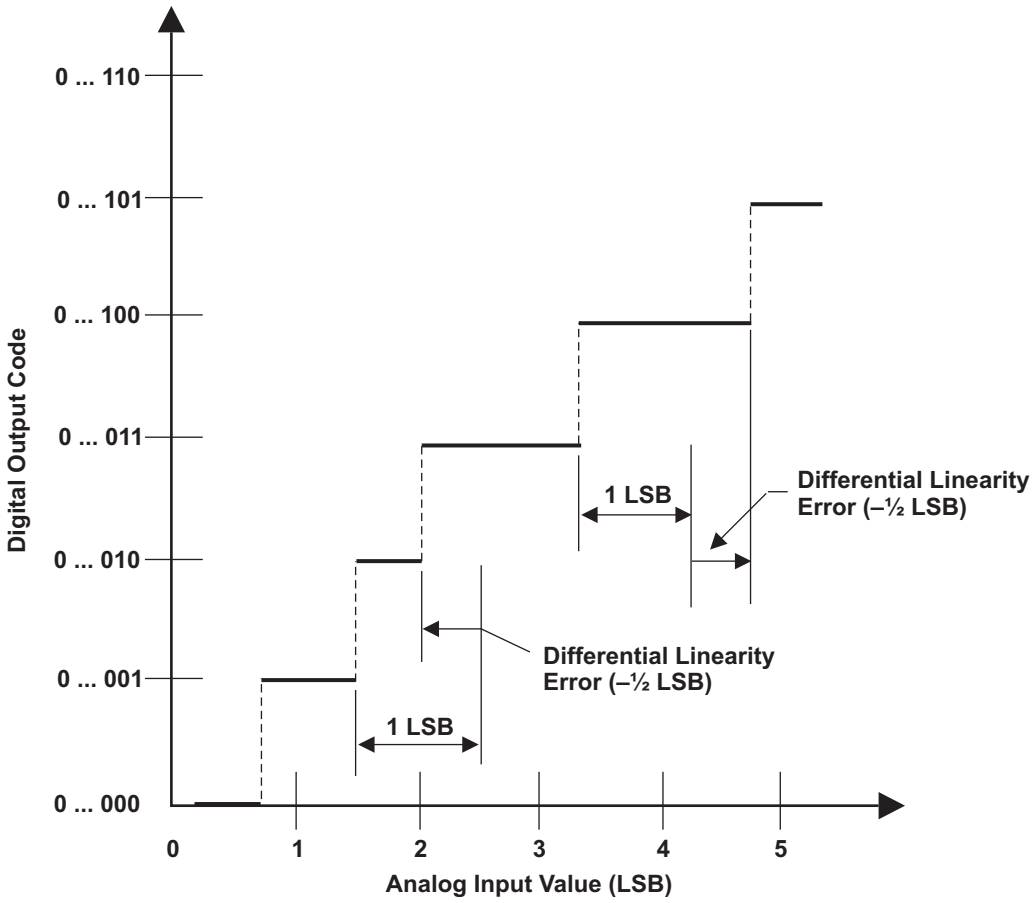

NOTE A: 1 LSB = $(AD_{REFHI} - AD_{REFLO})/2^{12}$

Figure 7-7. Differential Nonlinearity (DNL) Error

The integral nonlinearity error shown in Figure 7-8 (sometimes referred to as linearity error) is the deviation of the values on the actual transfer function from a straight line.

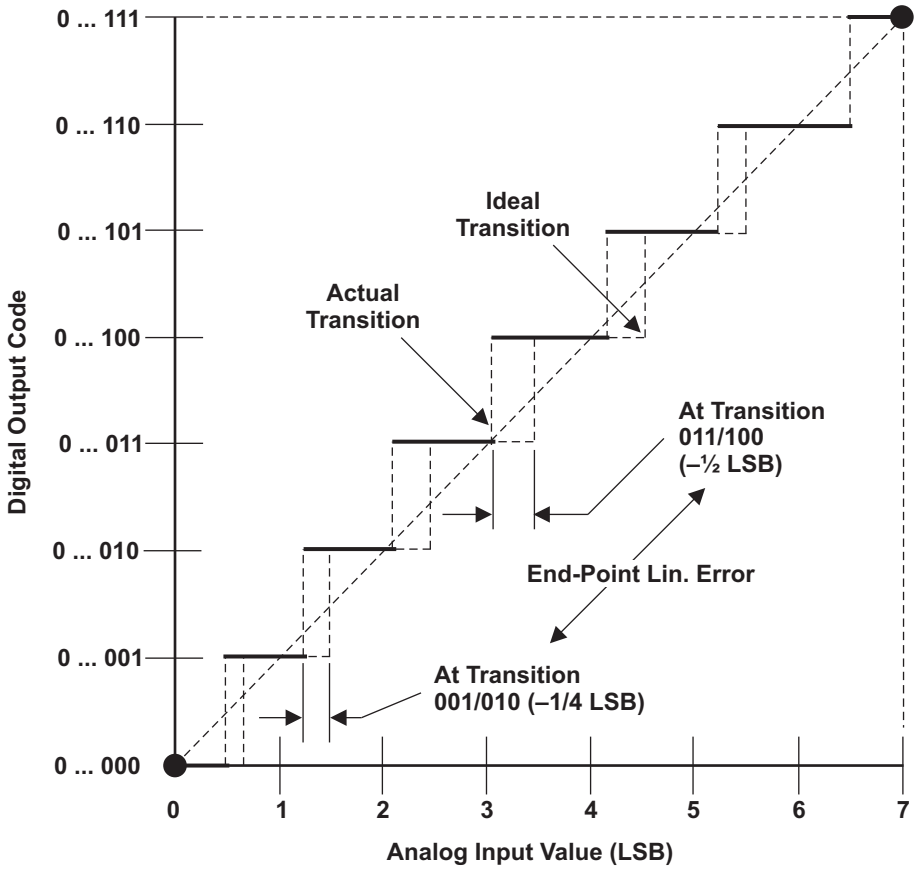

NOTE A: 1 LSB = $(AD_{REFHI} - AD_{REFLO})/2^{12}$

Figure 7-8. Integral Nonlinearity (INL) Error

Copyright © 2012–2015, Texas Instruments Incorporated

7.4.4.2 MibADC Total Error

The absolute accuracy or total error of an MibADC as shown in Figure 7-9 is the maximum value of the difference between an analog value and the ideal midstep value.

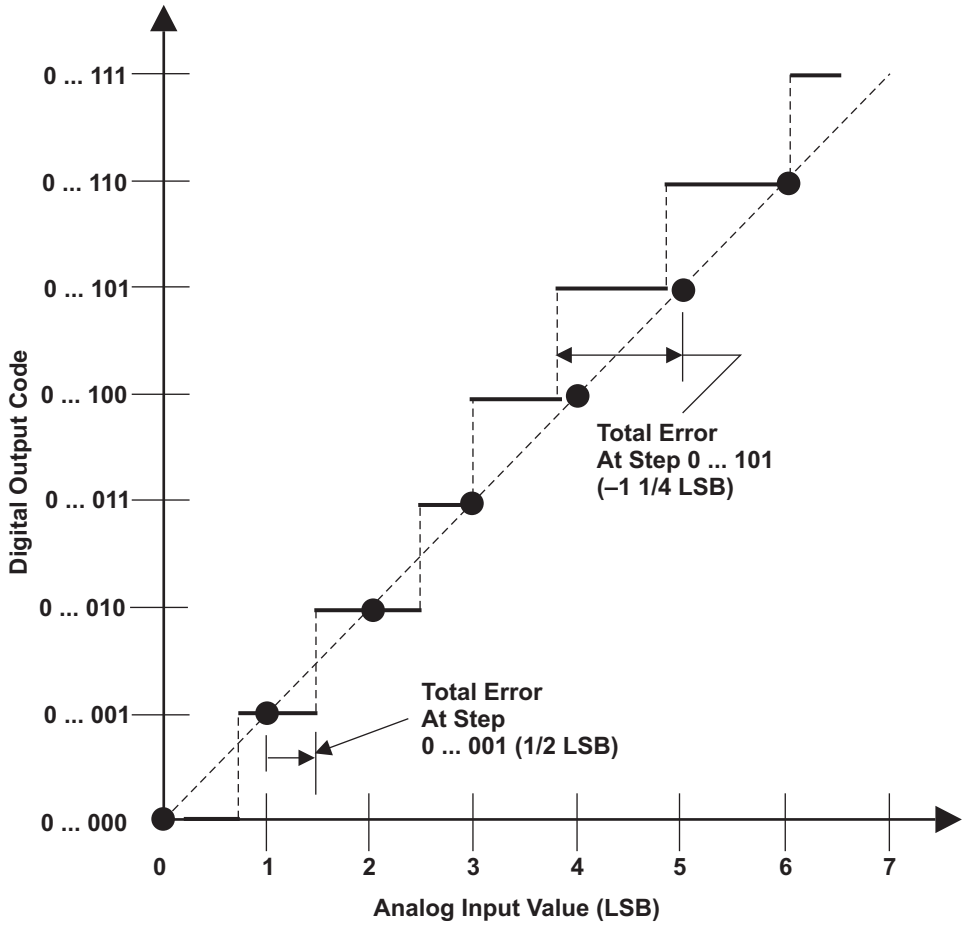

NOTE A: 1 LSB = $(AD_{REFHI} - AD_{REFLO})/2^{12}$

Figure 7-9. Absolute Accuracy (Total) Error

7.5 General-Purpose Input/Output

The GPIO module on this device supports two ports, GIOA and GIOB. The I/O pins are bidirectional and bit-programmable. Both GIOA and GIOB support external interrupt capability.

7.5.1 Features

The GPIO module has the following features:

- Each IO pin can be configured as:
  - Input
  - Output
  - Open Drain
- The interrupts have the following characteristics:
  - Programmable interrupt detection either on both edges or on a single edge (set in GIOINTDET)
  - Programmable edge-detection polarity, either rising or falling edge (set in GIOPOL register)
  - Individual interrupt flags (set in GIOFLG register)
  - Individual interrupt enables, set and cleared through GIOENASET and GIOENACLR registers respectively
  - Programmable interrupt priority, set through GIOLVLSET and GIOLVLCLR registers
- Internal pullup/pulldown allows unused I/O pins to be left unconnected

For information on input and output timings see Section 5.11 and Section 5.12

Copyright © 2012–2015, Texas Instruments Incorporated

7.6 Enhanced High-End Timer (N2HET)

The N2HET is an advanced intelligent timer that provides sophisticated timing functions for real-time applications. The timer is software-controlled, using a reduced instruction set, with a specialized timer micromachine and an attached I/O port. The N2HET can be used for pulse width modulated outputs, capture or compare inputs, or general-purpose I/O. It is especially well suited for applications requiring multiple sensor information and drive actuators with complex and accurate time pulses.

7.6.1 Features

The N2HET module has the following features:

- Programmable timer for input and output timing functions
- Reduced instruction set (30 instructions) for dedicated time and angle functions
- 160 words of instruction RAM protected by parity
- User defined number of 25-bit virtual counters for timer, event counters and angle counters
- 7-bit hardware counters for each pin allow up to 32-bit resolution in conjunction with the 25-bit virtual counters
- Up to 32 pins usable for input signal measurements or output signal generation
- Programmable suppression filter for each input pin with adjustable limiting frequency
- Low CPU overhead and interrupt load
- Efficient data transfer to or from the CPU memory with dedicated High-End-Timer Transfer Unit (HTU) or DMA
- Diagnostic capabilities with different loopback mechanisms and pin status read back functionality

7.6.2 N2HET RAM Organization

The timer RAM uses 4 RAM banks, where each bank has two port access capability. This means that one RAM address may be written while another address is read. The RAM words are 96-bits wide, which are split into three 32-bit fields (program, control, and data).

7.6.3 Input Timing Specifications

All of the N2HET channels have an enhanced pulse capture circuit. The N2HET instructions PCNT and WCAP use this circuit to achieve the input timing requirements shown in Figure 7-10 and Table 7-23 below.

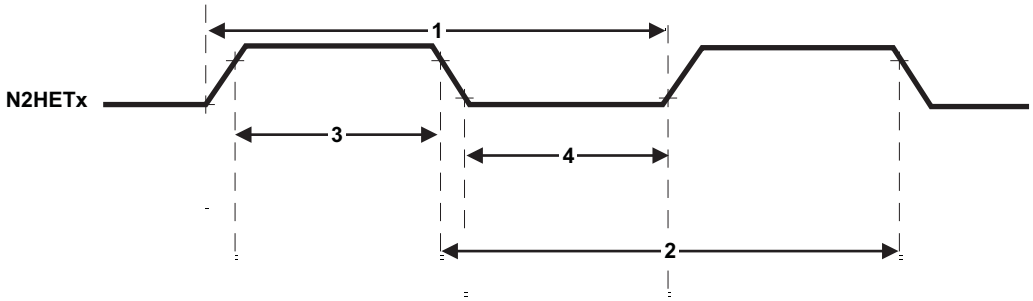

Figure 7-10. N2HET Input Capture Timings

Table 7-23. Input Timing Requirements for N2HET Channels with Enhanced Pulse Capture

PARAMETER		MIN	MAX	UNIT
1, 2	Input signal period, PCNT or WCAP	(HRP) (LRP) $tc_{(VCLK2)}$ + 2	2^{25} (HRP) (LRP) $tc_{(VCLK2)}$ - 2	ns
3	Input signal high phase, PCNT or WCAP	2 (HRP) $tc_{(VCLK2)}$ + 2	2^{25} (HRP) (LRP) $tc_{(VCLK2)}$ - 2	ns
4	Input signal low phase, PCNT or WCAP	2 (HRP) $tc_{(VCLK2)}$ + 2	2^{25} (HRP) (LRP) $tc_{(VCLK2)}$ - 2	ns

7.6.4 N2HET1-N2HET2 Synchronization

In some applications the N2HET resolutions must be synchronized. Some other applications require a single time base to be used for all PWM outputs and input timing captures.

The N2HET provides such a synchronization mechanism. The Clk_master/slave (HETGCR.16) configures the N2HET in master or slave mode (default is slave mode). A N2HET in master mode provides a signal to synchronize the prescalers of the slave N2HET. The slave N2HET synchronizes its loop resolution to the loop resolution signal sent by the master. The slave does not require this signal after it receives the first synchronization signal. However, anytime the slave receives the re-synchronization signal from the master, the slave must synchronize itself again..

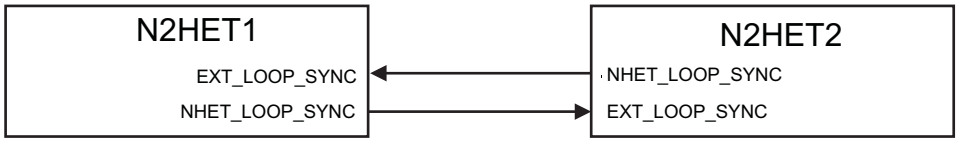

Figure 7-11. N2HET1 – N2HET2 Synchronization Hookup

7.6.5 N2HET Checking

7.6.5.1 Internal Monitoring

To assure correctness of the high-end timer operation and output signals, the two N2HET modules can be used to monitor each other's signals as shown in Figure 7-12. The direction of the monitoring is controlled by the I/O multiplexing control module.

Copyright © 2012–2015, Texas Instruments Incorporated

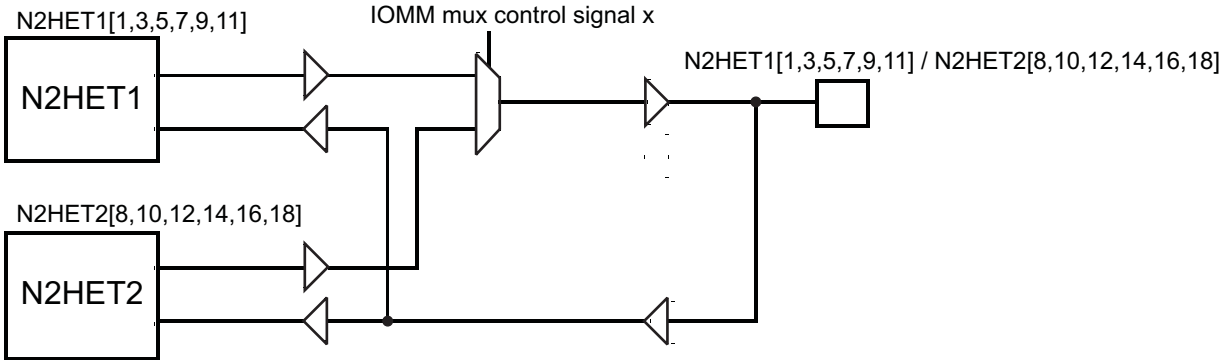

Figure 7-12. N2HET Monitoring

7.6.5.2 Output Monitoring using Dual Clock Comparator (DCC)

N2HET1[31] is connected as a clock source for counter 1 in DCC1. This allows the application to measure the frequency of the pulse-width modulated (PWM) signal on N2HET1[31].

Similarly, N2HET2[0] is connected as a clock source for counter 1 in DCC2. This allows the application to measure the frequency of the pulse-width modulated (PWM) signal on N2HET2[0].

Both N2HET1[31] and N2HET2[0] can be configured to be internal-only channels. That is, the connection to the DCC module is made directly from the output of the N2HETx module (from the input of the output buffer).

For more information on DCC see Section 6.7.3.

7.6.6 Disabling N2HET Outputs

Some applications require the N2HET outputs to be disabled under some fault condition. The N2HET module provides this capability through the "Pin Disable" input signal. This signal, when driven low, causes the N2HET outputs identified by a programmable register (HETPINDIS) to be tri-stated. For more details on the "N2HET Pin Disable" feature, see the device-specific Terminal Reference Manual.

GIOA[5] is connected to the "Pin Disable" input for N2HET1, and GIOB[2] is connected to the "Pin Disable" input for N2HET2.

7.6.7 High-End Timer Transfer Unit (HTU)

A High End Timer Transfer Unit (HTU) can perform DMA type transactions to transfer N2HET data to or from main memory. A Memory Protection Unit (MPU) is built into the HTU.

7.6.7.1 Features

- CPU and DMA independent
- Master Port to access system memory
- 8 control packets supporting dual buffer configuration
- Control packet information is stored in RAM protected by parity
- Event synchronization (HET transfer requests)
- Supports 32 or 64 bit transactions
- Addressing modes for HET address (8 byte or 16 byte) and system memory address (fixed, 32 bit or 64bit)
- One shot, circular and auto switch buffer transfer modes
- Request lost detection

7.6.7.2 Trigger Connections

Table 7-24. HTU1 Request Line Connection

Modules	Request Source	HTU1 Request
N2HET1	HTUREQ[0]	HTU1 DCP[0]
N2HET1	HTUREQ[1]	HTU1 DCP[1]
N2HET1	HTUREQ[2]	HTU1 DCP[2]
N2HET1	HTUREQ[3]	HTU1 DCP[3]
N2HET1	HTUREQ[4]	HTU1 DCP[4]
N2HET1	HTUREQ[5]	HTU1 DCP[5]
N2HET1	HTUREQ[6]	HTU1 DCP[6]
N2HET1	HTUREQ[7]	HTU1 DCP[7]

Table 7-25. HET TU2 Request Line Connection

Modules	Request Source	HET TU2 Request
N2HET2	HTUREQ[0]	HTU2 DCP[0]
N2HET2	HTUREQ[1]	HTU2 DCP[1]
N2HET2	HTUREQ[2]	HTU2 DCP[2]
N2HET2	HTUREQ[3]	HTU2 DCP[3]
N2HET2	HTUREQ[4]	HTU2 DCP[4]
N2HET2	HTUREQ[5]	HTU2 DCP[5]
N2HET2	HTUREQ[6]	HTU2 DCP[6]
N2HET2	HTUREQ[7]	HTU2 DCP[7]

Copyright © 2012–2015, Texas Instruments Incorporated

7.7 FlexRay Interface

The FlexRay module performs communication according to the FlexRay protocol specification v2.1. The sample clock bitrate can be programmed to values up to 10 MBit per second. Additional bus driver (BD) hardware is required for connection to the physical layer.

For communication on a FlexRay network, individual message buffers with up to 254 data bytes are configurable. The message storage consists of a single-ported message RAM that holds up to 128 message buffers. All functions concerning the handling of messages are implemented in the message handler. Those functions are the acceptance filtering, the transfer of messages between the two FlexRay Channel Protocol Controllers and the message RAM, maintaining the transmission schedule as well as providing message status information.

The register set of the FlexRay module can be accessed directly by the CPU via the VBUS interface. These registers are used to control, configure and monitor the FlexRay channel protocol controllers, message handler, global time unit, system universal control, frame/symbol processing, network management, interrupt control, and to access the message RAM via the input / output buffer.

7.7.1 Features

The FlexRay module has the following features:

- Conformance with FlexRay protocol specification v2.1
- Data rates of up to 10 Mbit/s on each channel
- Up to 128 message buffers
- 8 Kbyte of message RAM for storage of, for example, 128 message buffers with a maximum 48 byte data section or up to 30 message buffers with 254 byte data section
- Configuration of message buffers with different payload lengths
- One configurable receive FIFO
- Each message buffer can be configured as receive buffer, as transmit buffer or as part of the receive FIFO
- CPU access to message buffers via input and output buffer
- FlexRay Transfer Unit (FTU) for automatic data transfer between data memory and message buffers without CPU interaction
- Filtering for slot counter, cycle counter, and channel ID
- Maskable module interrupts
- Supports Network Management

7.7.2 Electrical and Timing Specifications

Table 7-26. Timing Requirements for FlexRay Inputs

Parameter		MIN	MAX	UNIT
t_{pw}	Input minimum pulse width to meet the FlexRay sampling requirement	$t_{c(VCLKA2)}$ + 2.5 (1)		ns

(1) $t_{RxAsymDelay}$ parameter

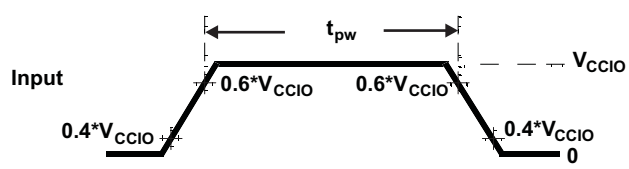

Figure 7-13. FlexRay Inputs

Table 7-27. FlexRay Jitter Timing(1)

Parameter		MIN	MAX	Unit
t_{Tx1bit}	Clock jitter and signal symmetry	98	102	ns
$t_{Tx10bit}$	FlexRay BSS (byte start sequence) to BSS	999	1001	ns
$t_{Tx10bitAvg}$	Average over 10000 samples	999.5	1000.5	ns
$t_{RxAsymDelay}$(2)	Delay difference between rise and fall from Rx pin to sample point in FlexRay core	–	2.5	ns
$t_{jit(SCLK)}$	Jitter for the 80MHz Sample Clock generated by the PLL	–	0.5	ns

(1) This parameter will be characterized, but not production-tested.
(2) This value is based on design simulation.

7.7.3 FlexRay Transfer Unit

The FlexRay Transfer Unit is able to transfer data between the input buffer (IBF) and output buffer (OBF) of the communication controller and the system memory without CPU interaction.

Because the FlexRay module is accessed through the FTU, the FTU must be powered up by the setting bit 23 in the Peripheral Power Down Registers of the System Module before accessing any FlexRay module register.

For more information on the FTU refer to the TMS570LS12x/11x Technical Reference Manual (SPNU515).

Copyright © 2012–2015, Texas Instruments Incorporated

7.8 Controller Area Network (DCAN)

The DCAN supports the CAN 2.0B protocol standard and uses a serial, multimaster communication protocol that efficiently supports distributed real-time control with robust communication rates of up to 1 megabit per second (Mbps). The DCAN is ideal for applications operating in noisy and harsh environments (for example, automotive and industrial fields) that require reliable serial communication or multiplexed wiring.

7.8.1 Features

Features of the DCAN module include:

- Supports CAN protocol version 2.0 part A, B
- Bit rates up to 1 MBit/s
- The CAN kernel can be clocked by the oscillator for baud-rate generation.
- 64 mailboxes on each DCAN
- Individual identifier mask for each message object
- Programmable FIFO mode for message objects
- Programmable loop-back modes for self-test operation
- Automatic bus on after Bus-Off state by a programmable 32-bit timer
- Message RAM protected by parity
- Direct access to Message RAM during test mode
- CAN Rx / Tx pins configurable as general purpose IO pins
- Message RAM Auto Initialization
- DMA support

For more information on the DCAN see the TMS570LS12x/11x Technical Reference Manual (SPNU515).

7.8.2 Electrical and Timing Specifications

Table 7-28. Dynamic Characteristics for the DCANx TX and RX pins

Parameter		MIN	MAX	Unit
$t_{d(CANnTX)}$	Delay time, transmit shift register to CANnTX pin (1)		15	ns
$t_{d(CANnRX)}$	Delay time, CANnRX pin to receive shift register		5	ns

(1) These values do not include rise/fall times of the output buffer.

7.9 Local Interconnect Network Interface (LIN)

The SCI/LIN module can be programmed to work either as an SCI or as a LIN. The core of the module is an SCI. The SCI's hardware features are augmented to achieve LIN compatibility.

The SCI module is a universal asynchronous receiver-transmitter that implements the standard nonreturn to zero format. The SCI can be used to communicate, for example, through an RS-232 port or over a K-line.

The LIN standard is based on the SCI (UART) serial data link format. The communication concept is single-master/multiple-slave with a message identification for multi-cast transmission between any network nodes.

7.9.1 LIN Features

The following are features of the LIN module:

- Compatible to LIN 1.3, 2.0 and 2.1 protocols
- Multibuffered receive and transmit units DMA capability for minimal CPU intervention
- Identification masks for message filtering
- Automatic Master Header Generation
  - Programmable Synch Break Field
  - Synch Field
  - Identifier Field
- Slave Automatic Synchronization
  - Synch break detection
  - Optional baudrate update
  - Synchronization Validation
- 2^{31} programmable transmission rates with 7 fractional bits
- Error detection
- 2 Interrupt lines with priority encoding

Copyright © 2012–2015, Texas Instruments Incorporated

7.10 Serial Communication Interface (SCI)

7.10.1 Features

- Standard universal asynchronous receiver-transmitter (UART) communication
- Supports full- or half-duplex operation
- Standard nonreturn to zero (NRZ) format
- Double-buffered receive and transmit functions
- Configurable frame format of 3 to 13 bits per character based on the following:
  - Data word length programmable from one to eight bits
  - Additional address bit in address-bit mode
  - Parity programmable for zero or one parity bit, odd or even parity
  - Stop programmable for one or two stop bits
- Asynchronous or isosynchronous communication modes
- Two multiprocessor communication formats allow communication between more than two devices.
- Sleep mode is available to free CPU resources during multiprocessor communication.
- The 24-bit programmable baud rate supports 2^{24} different baud rates provide high accuracy baud rate selection.
- Four error flags and Five status flags provide detailed information regarding SCI events.
- Capability to use DMA for transmit and receive data.

7.11 Inter-Integrated Circuit (I2C)

The inter-integrated circuit (I2C) module is a multi-master communication module providing an interface between the microcontroller and devices compliant with Philips Semiconductor I2C-bus specification version 2.1 and connected by an I2C-bus. This module will support any slave or master I2C compatible device.

7.11.1 Features

The I2C has the following features:

- Compliance to the Philips I2C bus specification, v2.1 (The I2C Specification, Philips document number 9398 393 40011)
  - Bit/Byte format transfer
  - 7-bit and 10-bit device addressing modes
  - General call
  - START byte
  - Multi-master transmitter/ slave receiver mode
  - Multi-master receiver/ slave transmitter mode
  - Combined master transmit/receive and receive/transmit mode
  - Transfer rates of 10 kbps up to 400 kbps (Phillips fast-mode rate)
- Free data format
- Two DMA events (transmit and receive)
- DMA event enable/disable capability
- Seven interrupts that can be used by the CPU
- Module enable/disable capability
- The SDA and SCL are optionally configurable as general purpose I/O
- Slew rate control of the outputs
- Open drain control of the outputs
- Programmable pullup/pulldown capability on the inputs
- Supports Ignore NACK mode

NOTE

This I2C module does not support:

- High-speed (HS) mode
- C-bus compatibility mode
- The combined format in 10-bit address mode (the I2C sends the slave address second byte every time it sends the slave address first byte)

Copyright © 2012–2015, Texas Instruments Incorporated

7.11.2 I2C I/O Timing Specifications

Table 7-29. I2C Signals (SDA and SCL) Switching Characteristics(1)

Parameter		Standard Mode		Fast Mode		Unit
		MIN	MAX	MIN	MAX	
$t_{c(I2CCLK)}$	Cycle time, Internal Module clock for I2C, prescaled from VCLK	75.2	149	75.2	149	ns
$f_{(SCL)}$	SCL Clock frequency	0	100	0	400	kHz
$t_{c(SCL)}$	Cycle time, SCL	10		2.5		µs
$t_{su(SCLH-SDAL)}$	Setup time, SCL high before SDA low (for a repeated START condition)	4.7		0.6		µs
$t_{h(SCLL-SDAL)}$	Hold time, SCL low after SDA low (for a repeated START condition)	4		0.6		µs
$t_{w(SCLL)}$	Pulse duration, SCL low	4.7		1.3		µs
$t_{w(SCLH)}$	Pulse duration, SCL high	4		0.6		µs
$t_{su(SDA-SCLH)}$	Setup time, SDA valid before SCL high	250		100		ns
$t_{h(SDA-SCLL)}$	Hold time, SDA valid after SCL low (for I2C bus devices)	0	3.45(2)	0	0.9	µs
$t_{w(SDAH)}$	Pulse duration, SDA high between STOP and START conditions	4.7		1.3		µs
$t_{su(SCLH-SDAH)}$	Setup time, SCL high before SDA high (for STOP condition)	4.0		0.6		µs
$t_{w(SP)}$	Pulse duration, spike (must be suppressed)			0	50	ns
C_b(3)	Capacitive load for each bus line		400		400	pF

(1) The I2C pins SDA and SCL do not feature fail-safe I/O buffers. These pins could potentially draw current when the device is powered down.
(2) The maximum $t_{h(SDA-SCLL)}$ for I2C bus devices has only to be met if the device does not stretch the low period ($t_{w(SCLL)}$) of the SCL signal.
(3) C_b = The total capacitance of one bus line in pF.

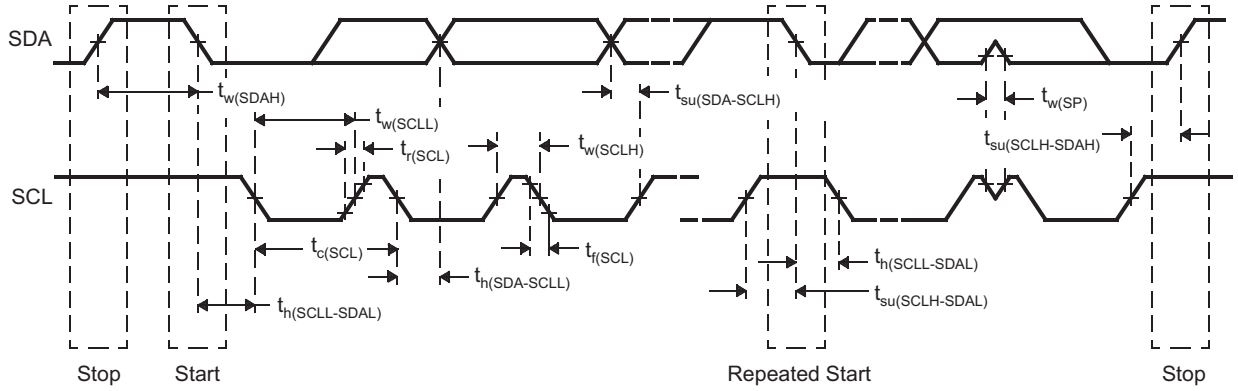

Figure 7-14. I2C Timings

NOTE

- A device must internally provide a hold time of at least 300 ns for the SDA signal (referred to the VIHmin of the SCL signal) to bridge the undefined region of the falling edge of SCL.
- The maximum $t_{h(SDA-SCLL)}$ has only to be met if the device does not stretch the LOW period ($t_{w(SCLL)}$) of the SCL signal.
- A Fast-mode I2C-bus device can be used in a Standard-mode I2C-bus system, but the requirement $t_{su(SDA-SCLH)} \geq 250$ ns must then be met. This will automatically be the case if the device does not stretch the LOW period of the SCL signal. If such a device does stretch the LOW period of the SCL signal, it must output the next data bit to the SDA line tr max + $t_{su(SDA-SCLH)}$.
- C_b = total capacitance of one bus line in pF. If mixed with fast-mode devices, faster fall-times are allowed.

Copyright © 2012–2015, Texas Instruments Incorporated

7.12 Multibuffered / Standard Serial Peripheral Interface

The MibSPI is a high-speed synchronous serial input/output port that allows a serial bit stream of programmed length (2 to 16 bits) to be shifted in and out of the device at a programmed bit-transfer rate. Typical applications for the SPI include interfacing to external peripherals, such as I/Os, memories, display drivers, and analog-to-digital converters.

7.12.1 Features

Both Standard and MibSPI modules have the following features:

- 16-bit shift register
- Receive buffer register
- 8-bit baud clock generator
- SPICLK can be internally-generated (master mode) or received from an external clock source (slave mode)
- Each word transferred can have a unique format
- SPI I/Os not used in the communication can be used as digital input/output signals

Table 7-30. MibSPI/SPI Configurations PGE Package

MibSPIx/SPIx	I/Os
MibSPI1	MIBSPI1SIMO[1:0], MIBSPI1SOMI[1:0], MIBSPI1CLK, MIBSPI1nCS[5:4,2:0], MIBSPI1nENA
MibSPI3	MIBSPI3SIMO[0], MIBSPI3SOMI[0], MIBSPI3CLK, MIBSPI3nCS[5:0], MIBSPI3nENA
MibSPI5	MIBSPI5SIMO[0], MIBSPI5SOMI[2:0], MIBSPI5CLK, MIBSPI5nCS[0], MIBSPI5nENA
SPI4	SPI4SIMO[0], SPI4SOMI[0], SPI4CLK, SPI4nCS[0], SPI4nENA

Table 7-31. MibSPI/SPI Configurations ZWT Package

MibSPIx/SPIx	I/Os
MibSPI1	MIBSPI1SIMO[1:0], MIBSPI1SOMI[1:0], MIBSPI1CLK, MIBSPI1nCS[5:0], MIBSPI1nENA
MibSPI3	MIBSPI3SIMO[0], MIBSPI3SOMI[0], MIBSPI3CLK, MIBSPI3nCS[5:0], MIBSPI3nENA
MibSPI5	MIBSPI5SIMO[3:0], MIBSPI5SOMI[3:0], MIBSPI5CLK, MIBSPI5nCS[3:0], MIBSPI5nENA
SPI2	SPI2SIMO[0], SPI2SOMI[0], SPI2CLK, SPI2nCS[1:0], SPI2nENA
SPI4	SPI4SIMO[0], SPI4SOMI[0], SPI4CLK, SPI4nCS[0], SPI4nENA

7.12.2 MibSPI Transmit and Receive RAM Organization

The Multibuffer RAM is comprised of 128 buffers. Each entry in the Multibuffer RAM consists of 4 parts: a 16-bit transmit field, a 16-bit receive field, a 16-bit control field and a 16-bit status field. The Multibuffer RAM can be partitioned into multiple transfer group with variable number of buffers each. Each MibSPIx module supports 8 transfer groups.

7.12.3 MibSPI Transmit Trigger Events

Each of the transfer groups can be configured individually. For each of the transfer groups a trigger event and a trigger source can be chosen. A trigger event can be for example a rising edge or a permanent low level at a selectable trigger source. For example, up to 15 trigger sources are available for use by each transfer group.

7.12.3.1 MIBSPI1 Event Trigger Hookup

Table 7-32. MIBSPI1 Event Trigger Hookup

Event #	TGxCTRL TRIGSRC[3:0]	Trigger
Disabled	0000	No trigger source
EVENT0	0001	GIOA[0]
EVENT1	0010	GIOA[1]
EVENT2	0011	GIOA[2]
EVENT3	0100	GIOA[3]
EVENT4	0101	GIOA[4]
EVENT5	0110	GIOA[5]
EVENT6	0111	GIOA[6]
EVENT7	1000	GIOA[7]
EVENT8	1001	N2HET1[8]
EVENT9	1010	N2HET1[10]
EVENT10	1011	N2HET1[12]
EVENT11	1100	N2HET1[14]
EVENT12	1101	N2HET1[16]
EVENT13	1110	N2HET1[18]
EVENT14	1111	Internal Tick counter

NOTE

For N2HET1 trigger sources, the connection to the MibSPI1 module trigger input is made from the input side of the output buffer (at the N2HET1 module boundary). This way, a trigger condition can be generated even if the N2HET1 signal is not selected to be output on the pad.

NOTE

For GIOx trigger sources, the connection to the MibSPI1 module trigger input is made from the output side of the input buffer. This way, a trigger condition can be generated either by selecting the GIOx pin as an output pin and selecting the pin to be a GIOx pin, or by driving the GIOx pin from an external trigger source. If the mux control module is used to select different functionality instead of the GIOx signal, then care must be taken to disable GIOx from triggering MibSPI1 transfers; there is no multiplexing on the input connections.

7.12.3.2 MIBSPI3 Event Trigger Hookup

Table 7-33. MIBSPI3 Event Trigger Hookup

Event #	TGxCTRL TRIGSRC[3:0]	Trigger
Disabled	0000	No trigger source
EVENT0	0001	GIOA[0]
EVENT1	0010	GIOA[1]
EVENT2	0011	GIOA[2]
EVENT3	0100	GIOA[3]
EVENT4	0101	GIOA[4]
EVENT5	0110	GIOA[5]
EVENT6	0111	GIOA[6]
EVENT7	1000	GIOA[7]
EVENT8	1001	N2HET1[8]

Copyright © 2012–2015, Texas Instruments Incorporated

Table 7-33. MIBSPI3 Event Trigger Hookup (continued)

Event #	TGxCTRL TRIGSRC[3:0]	Trigger
EVENT9	1010	N2HET1[10]
EVENT10	1011	N2HET1[12]
EVENT11	1100	N2HET1[14]
EVENT12	1101	N2HET1[16]
EVENT13	1110	N2HET1[18]
EVENT14	1111	Internal Tick counter

NOTE

For N2HET1 trigger sources, the connection to the MibSPI3 module trigger input is made from the input side of the output buffer (at the N2HET1 module boundary). This way, a trigger condition can be generated even if the N2HET1 signal is not selected to be output on the pad.

NOTE

For GIOx trigger sources, the connection to the MibSPI3 module trigger input is made from the output side of the input buffer. This way, a trigger condition can be generated either by selecting the GIOx pin as an output pin and selecting the pin to be a GIOx pin, or by driving the GIOx pin from an external trigger source. If the mux control module is used to select different functionality instead of the GIOx signal, then care must be taken to disable GIOx from triggering MibSPI3 transfers; there is no multiplexing on the input connections.

7.12.3.3 MIBSPI5 Event Trigger Hookup

Table 7-34. MIBSPI5 Event Trigger Hookup

Event #	TGxCTRL TRIGSRC[3:0]	Trigger
Disabled	0000	No trigger source
EVENT0	0001	GIOA[0]
EVENT1	0010	GIOA[1]
EVENT2	0011	GIOA[2]
EVENT3	0100	GIOA[3]
EVENT4	0101	GIOA[4]
EVENT5	0110	GIOA[5]
EVENT6	0111	GIOA[6]
EVENT7	1000	GIOA[7]
EVENT8	1001	N2HET1[8]
EVENT9	1010	N2HET1[10]
EVENT10	1011	N2HET1[12]
EVENT11	1100	N2HET1[14]
EVENT12	1101	N2HET1[16]
EVENT13	1110	N2HET1[18]
EVENT14	1111	Internal Tick counter

NOTE

For N2HET1 trigger sources, the connection to the MibSPI5 module trigger input is made from the input side of the output buffer (at the N2HET1 module boundary). This way, a trigger condition can be generated even if the N2HET1 signal is not selected to be output on the pad.

NOTE

For GIOx trigger sources, the connection to the MibSPI5 module trigger input is made from the output side of the input buffer. This way, a trigger condition can be generated either by selecting the GIOx pin as an output pin and selecting the pin to be a GIOx pin, or by driving the GIOx pin from an external trigger source. If the mux control module is used to select different functionality instead of the GIOx signal, then care must be taken to disable GIOx from triggering MibSPI5 transfers; there is no multiplexing on the input connections.

Copyright © 2012–2015, Texas Instruments Incorporated

7.12.4 MibSPI/SPI Master Mode I/O Timing Specifications

Table 7-35. SPI Master Mode External Timing Parameters (CLOCK PHASE = 0, SPICLK = output, SPISIMO = output, and SPISOMI = input)(1)(2)(3)

NO.	Parameter			MIN	MAX	Unit
1	$t_{c(SPC)M}$	Cycle time, SPICLK(4)		40	$256t_{c(VCLK)}$	ns
2(5)	$t_{w(SPCH)M}$	Pulse duration, SPICLK high (clock polarity = 0)		$0.5t_{c(SPC)M} – t_{r(SPC)M} – 3$	$0.5t_{c(SPC)M} + 3$	ns
	$t_{w(SPCL)M}$	Pulse duration, SPICLK low (clock polarity = 1)		$0.5t_{c(SPC)M} – t_{f(SPC)M} – 3$	$0.5t_{c(SPC)M} + 3$	
3(5)	$t_{w(SPCL)M}$	Pulse duration, SPICLK low (clock polarity = 0)		$0.5t_{c(SPC)M} – t_{f(SPC)M} – 3$	$0.5t_{c(SPC)M} + 3$	ns
	$t_{w(SPCH)M}$	Pulse duration, SPICLK high (clock polarity = 1)		$0.5t_{c(SPC)M} – t_{r(SPC)M} – 3$	$0.5t_{c(SPC)M} + 3$	
4(5)	$t_{d(SPCH-SIMO)M}$	Delay time, SPISIMO valid before SPICLK low (clock polarity = 0)		$0.5t_{c(SPC)M} – 6$		ns
	$t_{d(SPCL-SIMO)M}$	Delay time, SPISIMO valid before SPICLK high (clock polarity = 1)		$0.5t_{c(SPC)M} – 6$		
5(5)	$t_{v(SPCL-SIMO)M}$	Valid time, SPISIMO data valid after SPICLK low (clock polarity = 0)		$0.5t_{c(SPC)M} – t_{f(SPC)} – 4$		ns
	$t_{v(SPCH-SIMO)M}$	Valid time, SPISIMO data valid after SPICLK high (clock polarity = 1)		$0.5t_{c(SPC)M} – t_{r(SPC)} – 4$		
6(5)	$t_{su(SOMI-SPCL)M}$	Setup time, SPISOMI before SPICLK low (clock polarity = 0)		$t_{f(SPC)} + 2.2$		ns
	$t_{su(SOMI-SPCH)M}$	Setup time, SPISOMI before SPICLK high (clock polarity = 1)		$t_{r(SPC)} + 2.2$		
7(5)	$t_{h(SPCL-SOMI)M}$	Hold time, SPISOMI data valid after SPICLK low (clock polarity = 0)		10		ns
	$t_{h(SPCH-SOMI)M}$	Hold time, SPISOMI data valid after SPICLK high (clock polarity = 1)		10		
8(6)	$t_{C2TDELAY}$	Setup time CS active until SPICLK high (clock polarity = 0)	CSHOLD = 0	$C2TDELAY*t_{c(VCLK)} + 2*t_{c(VCLK)} - t_{f(SPICS)} + t_{r(SPC)} – 7$	$(C2TDELAY+2) * t_{c(VCLK)} - t_{f(SPICS)} + t_{r(SPC)} + 5.5$	ns
			CSHOLD = 1	$C2TDELAY*t_{c(VCLK)} + 3*t_{c(VCLK)} - t_{f(SPICS)} + t_{r(SPC)} – 7$	$(C2TDELAY+3) * t_{c(VCLK)} - t_{f(SPICS)} + t_{r(SPC)} + 5.5$	
		Setup time CS active until SPICLK low (clock polarity = 1)	CSHOLD = 0	$C2TDELAY*t_{c(VCLK)} + 2*t_{c(VCLK)} - t_{f(SPICS)} + t_{f(SPC)} – 7$	$(C2TDELAY+2) * t_{c(VCLK)} - t_{f(SPICS)} + t_{f(SPC)} + 5.5$	ns
			CSHOLD = 1	$C2TDELAY*t_{c(VCLK)} + 3*t_{c(VCLK)} - t_{f(SPICS)} + t_{f(SPC)} – 7$	$(C2TDELAY+3) * t_{c(VCLK)} - t_{f(SPICS)} + t_{f(SPC)} + 5.5$	
9(6)	$t_{T2CDELAY}$	Hold time SPICLK low until CS inactive (clock polarity = 0)		$0.5*t_{c(SPC)M} + T2CDELAY*t_{c(VCLK)} + t_{c(VCLK)} - t_{f(SPC)} + t_{r(SPICS)} - 7$	$0.5*t_{c(SPC)M} + T2CDELAY*t_{c(VCLK)} + t_{c(VCLK)} - t_{f(SPC)} + t_{r(SPICS)} + 11$	ns
		Hold time SPICLK high until CS inactive (clock polarity = 1)		$0.5*t_{c(SPC)M} + T2CDELAY*t_{c(VCLK)} + t_{c(VCLK)} - t_{r(SPC)} + tr(SPICS) - 7$	$0.5*t_{c(SPC)M} + T2CDELAY*t_{c(VCLK)} + t_{c(VCLK)} - t_{r(SPC)} + t_{r(SPICS)} + 11$	ns
10	t_{SPIENA}	SPIENAn Sample point		$(C2TDELAY+1) * t_{c(VCLK)} - t_{f(SPICS)} – 29$	$(C2TDELAY+1)*t_{c(VCLK)}$	ns
11	$t_{SPIENAW}$	SPIENAn Sample point from write to buffer			$(C2TDELAY+2)*t_{c(VCLK)}$	ns

(1) The MASTER bit (SPIGCR1.0) is set and the CLOCK PHASE bit (SPIFMTx.16) is cleared.
(2) $t_{c(VCLK)}$ = interface clock cycle time = $1 / f_{(VCLK)}$
(3) For rise and fall timings, see Table 5-8.
(4) When the SPI is in Master mode, the following must be true:
For PS values from 1 to 255: $t_{c(SPC)M} \geq (PS +1)t_{c(VCLK)} \geq 40ns$, where PS is the prescale value set in the SPIFMTx.[15:8] register bits.
For PS values of 0: $t_{c(SPC)M} = 2t_{c(VCLK)} \geq 40ns$.
The external load on the SPICLK pin must be less than 60pF.
(5) The active edge of the SPICLK signal referenced is controlled by the CLOCK POLARITY bit (SPIFMTx.17).
(6) C2TDELAY and T2CDELAY is programmed in the SPIDELAY register

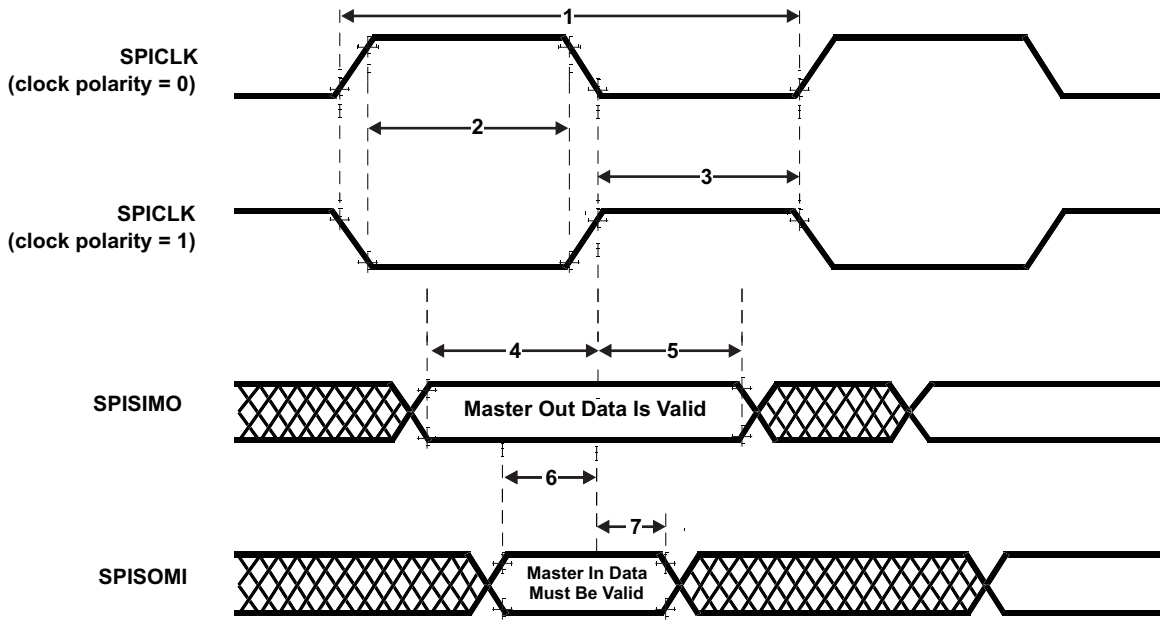

Figure 7-15. SPI Master Mode External Timing (CLOCK PHASE = 0)

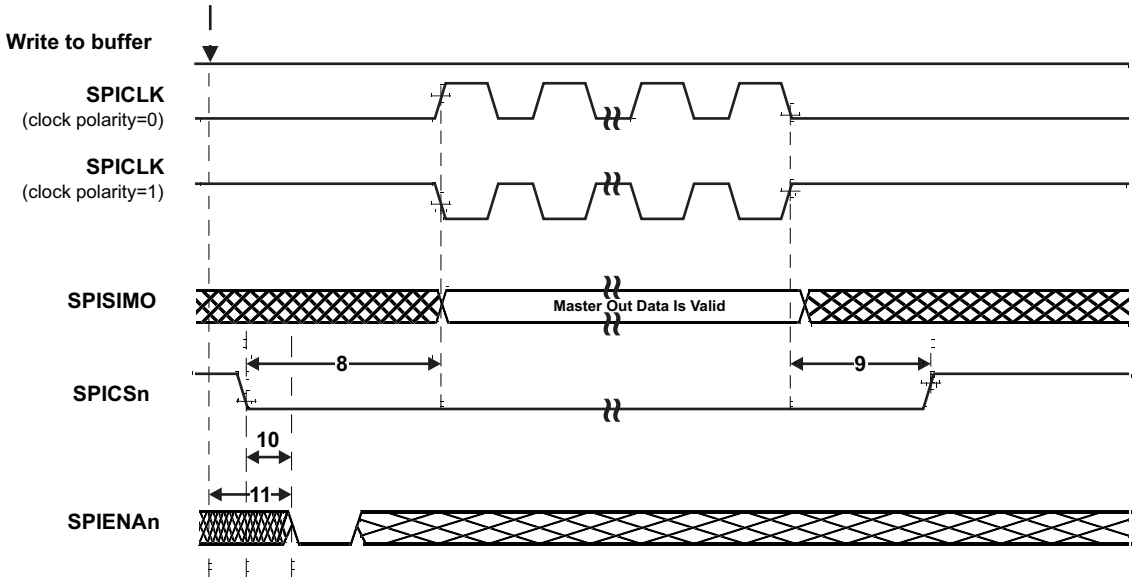

Figure 7-16. SPI Master Mode Chip Select Timing (CLOCK PHASE = 0)

Copyright © 2012–2015, Texas Instruments Incorporated

Table 7-36. SPI Master Mode External Timing Parameters (CLOCK PHASE = 1, SPICLK = output, SPISIMO = output, and SPISOMI = input)(1)(2)(3)

NO.	Parameter			MIN	MAX	Unit
1	$t_{c(SPC)M}$	Cycle time, SPICLK (4)		40	$256t_{c(VCLK)}$	ns
2(5)	$t_{w(SPCH)M}$	Pulse duration, SPICLK high (clock polarity = 0)		$0.5t_{c(SPC)M} – t_{r(SPC)M} – 3$	$0.5t_{c(SPC)M} + 3$	ns
	$t_{w(SPCL)M}$	Pulse duration, SPICLK low (clock polarity = 1)		$0.5t_{c(SPC)M} – t_{f(SPC)M} – 3$	$0.5t_{c(SPC)M} + 3$	
3(5)	$t_{w(SPCL)M}$	Pulse duration, SPICLK low (clock polarity = 0)		$0.5t_{c(SPC)M} – t_{f(SPC)M} – 3$	$0.5t_{c(SPC)M} + 3$	ns
	$t_{w(SPCH)M}$	Pulse duration, SPICLK high (clock polarity = 1)		$0.5t_{c(SPC)M} – t_{r(SPC)M} – 3$	$0.5t_{c(SPC)M} + 3$	
4(5)	$t_{v(SIMO-SPCH)M}$	Valid time, SPICLK high after SPISIMO data valid (clock polarity = 0)		$0.5t_{c(SPC)M} – 6$		ns
	$t_{v(SIMO-SPCL)M}$	Valid time, SPICLK low after SPISIMO data valid (clock polarity = 1)		$0.5t_{c(SPC)M} – 6$		
5(5)	$t_{v(SPCH-SIMO)M}$	Valid time, SPISIMO data valid after SPICLK high (clock polarity = 0)		$0.5t_{c(SPC)M} – t_{r(SPC)} – 4$		ns
	$t_{v(SPCL-SIMO)M}$	Valid time, SPISIMO data valid after SPICLK low (clock polarity = 1)		$0.5t_{c(SPC)M} – t_{f(SPC)} – 4$		
6(5)	$t_{su(SOMI-SPCH)M}$	Setup time, SPISOMI before SPICLK high (clock polarity = 0)		$t_{r(SPC)} + 2.2$		ns
	$t_{su(SOMI-SPCL)M}$	Setup time, SPISOMI before SPICLK low (clock polarity = 1)		$t_{f(SPC)} + 2.2$		
7(5)	$t_{v(SPCH-SOMI)M}$	Valid time, SPISOMI data valid after SPICLK high (clock polarity = 0)		10		ns
	$t_{v(SPCL-SOMI)M}$	Valid time, SPISOMI data valid after SPICLK low (clock polarity = 1)		10		
8(6)	$t_{C2TDELAY}$	Setup time CS active until SPICLK high (clock polarity = 0)	CSHOLD = 0	$0.5*t_{c(SPC)M} + (C2TDELAY+2) * t_{c(VCLK)} - t_{f(SPICS)} + t_{r(SPC)} – 7$	$0.5*t_{c(SPC)M} + (C2TDELAY+2) * t_{c(VCLK)} - t_{f(SPICS)} + t_{r(SPC)} + 5.5$	ns
			CSHOLD = 1	$0.5*t_{c(SPC)M} + (C2TDELAY+3) * t_{c(VCLK)} - t_{f(SPICS)} + t_{r(SPC)} – 7$	$0.5*t_{c(SPC)M} + (C2TDELAY+3) * t_{c(VCLK)} - t_{f(SPICS)} + t_{r(SPC)} + 5.5$	
		Setup time CS active until SPICLK low (clock polarity = 1)	CSHOLD = 0	$0.5*t_{c(SPC)M} + (C2TDELAY+2) * t_{c(VCLK)} - t_{f(SPICS)} + t_{f(SPC)} – 7$	$0.5*t_{c(SPC)M} + (C2TDELAY+2) * t_{c(VCLK)} - t_{f(SPICS)} + t_{f(SPC)} + 5.5$	ns
			CSHOLD = 1	$0.5*t_{c(SPC)M} + (C2TDELAY+3) * t_{c(VCLK)} - t_{f(SPICS)} + t_{f(SPC)} – 7$	$0.5*t_{c(SPC)M} + (C2TDELAY+3) * t_{c(VCLK)} - t_{f(SPICS)} + t_{f(SPC)} + 5.5$	
9(6)	$t_{T2CDELAY}$	Hold time SPICLK low until CS inactive (clock polarity = 0)		$T2CDELAY*t_{c(VCLK)} + t_{c(VCLK)} - t_{f(SPC)} + t_{r(SPICS)} - 7$	$T2CDELAY*t_{c(VCLK)} + t_{c(VCLK)} - t_{f(SPC)} + t_{r(SPICS)} + 11$	ns
		Hold time SPICLK high until CS inactive (clock polarity = 1)		$T2CDELAY*t_{c(VCLK)} + t_{c(VCLK)} - t_{r(SPC)} + t_{r(SPICS)} - 7$	$T2CDELAY*t_{c(VCLK)} + t_{c(VCLK)} - t_{r(SPC)} + t_{r(SPICS)} + 11$	ns
10	t_{SPIENA}	SPIENAn Sample Point		$(C2TDELAY+1)* t_{c(VCLK)} - t_{f(SPICS)} – 29$	$(C2TDELAY+1)*t_{c(VCLK)}$	ns
11	$t_{SPIENAW}$	SPIENAn Sample point from write to buffer			$(C2TDELAY+2)*t_{c(VCLK)}$	ns

(1) The MASTER bit (SPIGCR1.0) is set and the CLOCK PHASE bit (SPIFMTx.16) is set.
(2) $t_{c(VCLK)}$ = interface clock cycle time = 1 / $f_{(VCLK)}$
(3) For rise and fall timings, see the Table 5-8.
(4) When the SPI is in Master mode, the following must be true:
For PS values from 1 to 255: $t_{c(SPC)M} \geq (PS +1)t_{c(VCLK)} \geq 40ns$, where PS is the prescale value set in the SPIFMTx.[15:8] register bits.
For PS values of 0: $t_{c(SPC)M} = 2t_{c(VCLK)} \geq 40ns$.
The external load on the SPICLK pin must be less than 60pF.
(5) The active edge of the SPICLK signal referenced is controlled by the CLOCK POLARITY bit (SPIFMTx.17).
(6) C2TDELAY and T2CDELAY is programmed in the SPIDELAY register

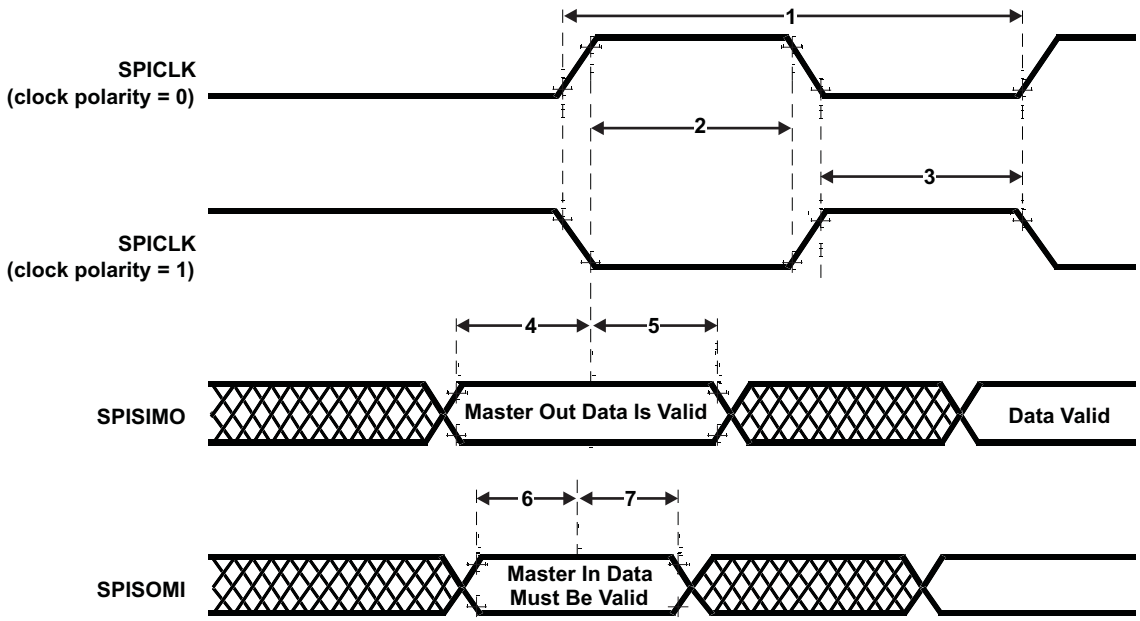

Figure 7-17. SPI Master Mode External Timing (CLOCK PHASE = 1)

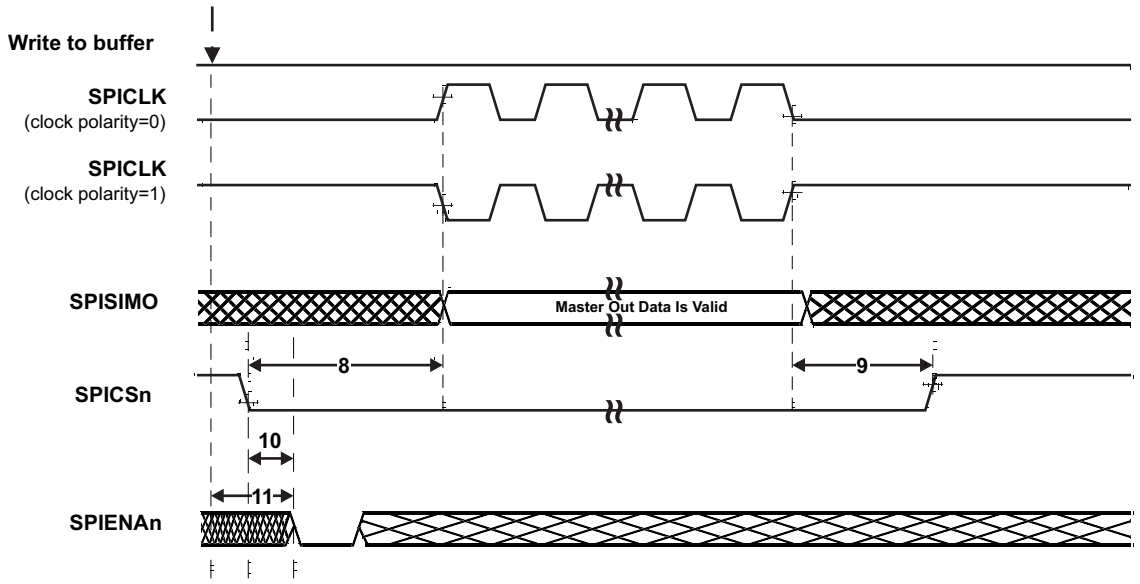

Figure 7-18. SPI Master Mode Chip Select Timing (CLOCK PHASE = 1)

Copyright © 2012–2015, Texas Instruments Incorporated

7.12.5 SPI Slave Mode I/O Timings

Table 7-37. SPI Slave Mode External Timing Parameters (CLOCK PHASE = 0, SPICLK = input, SPISIMO = input, and SPISOMI = output)(1)(2)(3)(4)

NO.	Parameter		MIN	MAX	Unit
1	$t_{c(SPC)S}$	Cycle time, SPICLK(5)	40		ns
2(6)	$t_{w(SPCH)S}$	Pulse duration, SPICLK high (clock polarity = 0)	14		ns
	$t_{w(SPCL)S}$	Pulse duration, SPICLK low (clock polarity = 1)	14		
3(6)	$t_{w(SPCL)S}$	Pulse duration, SPICLK low (clock polarity = 0)	14		ns
	$t_{w(SPCH)S}$	Pulse duration, SPICLK high (clock polarity = 1)	14		
4(6)	$t_{d(SPCH-SOMI)S}$	Delay time, SPISOMI valid after SPICLK high (clock polarity = 0)		$t_{rf(SOMI)}$ + 20	ns
	$t_{d(SPCL-SOMI)S}$	Delay time, SPISOMI valid after SPICLK low (clock polarity = 1)		$t_{rf(SOMI)}$ + 20	
5(6)	$t_{h(SPCH-SOMI)S}$	Hold time, SPISOMI data valid after SPICLK high (clock polarity =0)	2		ns
	$t_{h(SPCL-SOMI)S}$	Hold time, SPISOMI data valid after SPICLK low (clock polarity =1)	2		
6(6)	$t_{su(SIMO-SPCL)S}$	Setup time, SPISIMO before SPICLK low (clock polarity = 0)	4		ns
	$t_{su(SIMO-SPCH)S}$	Setup time, SPISIMO before SPICLK high (clock polarity = 1)	4		
7(6)	$t_{h(SPCL-SIMO)S}$	Hold time, SPISIMO data valid after SPICLK low (clock polarity = 0)	2		ns
	$t_{h(SPCH-SIMO)S}$	Hold time, SPISIMO data valid after S PICLK high (clock polarity = 1)	2		
8	$t_{d(SPCL-SENAH)S}$	Delay time, SPIENAn high after last SPICLK low (clock polarity = 0)	$1.5t_{c(VCLK)}$	$2.5t_{c(VCLK)}+t_{r(ENAn)}+22$	ns
	$t_{d(SPCH-SENAH)S}$	Delay time, SPIENAn high after last SPICLK high (clock polarity = 1)	$1.5t_{c(VCLK)}$	$2.5t_{c(VCLK)}+t_{r(ENAn)}+22$	
9	$t_{d(SCSL-SENAL)S}$	Delay time, SPIENAn low after SPICSn low (if new data has been written to the SPI buffer)	$t_{f(ENAn)}$	$t_{c(VCLK)}+t_{f(ENAn)}+27$	ns

(1) The MASTER bit (SPIGCR1.0) is cleared and the CLOCK PHASE bit (SPIFMTx.16) is cleared.
(2) If the SPI is in slave mode, the following must be true: $t_{c(SPC)S} \geq (PS + 1)\ t_{c(VCLK)}$, where PS = prescale value set in SPIFMTx.[15:8].
(3) For rise and fall timings, see Table 5-8.
(4) $t_{c(VCLK)}$ = interface clock cycle time = 1 /$f_{(VCLK)}$
(5) When the SPI is in Slave mode, the following must be true:
For PS values from 1 to 255: $t_{c(SPC)S} \geq (PS +1)t_{c(VCLK)} \geq 40$ns, where PS is the prescale value set in the SPIFMTx.[15:8] register bits.
For PS values of 0: $t_{c(SPC)S} = 2t_{c(VCLK)} \geq 40$ns.
(6) The active edge of the SPICLK signal referenced is controlled by the CLOCK POLARITY bit (SPIFMTx.17).

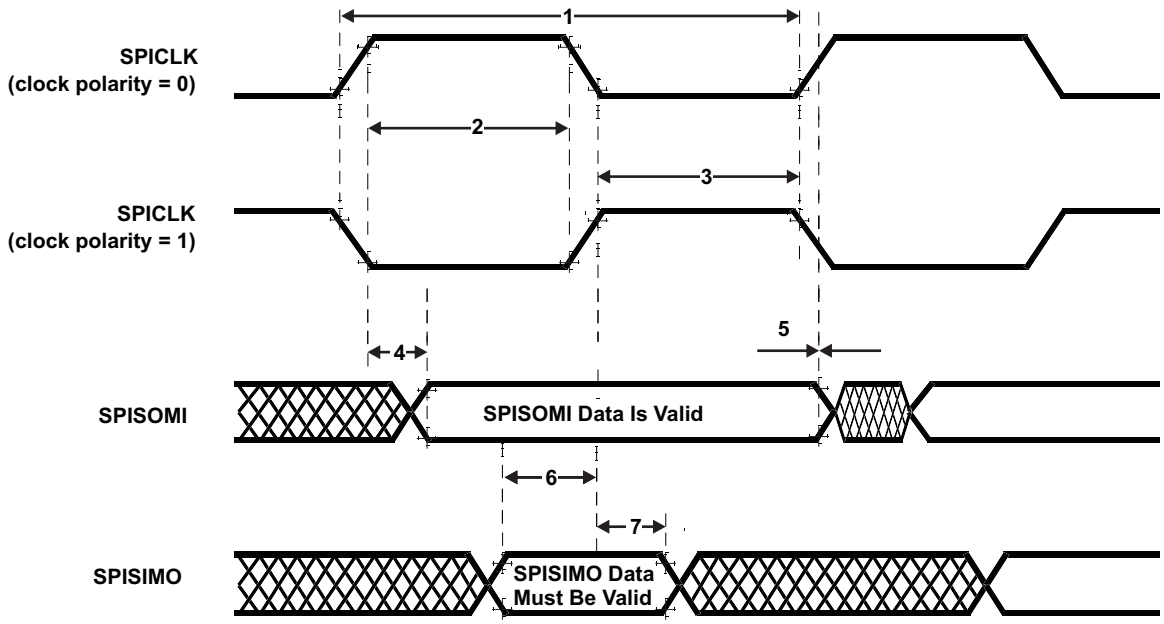

Figure 7-19. SPI Slave Mode External Timing (CLOCK PHASE = 0)

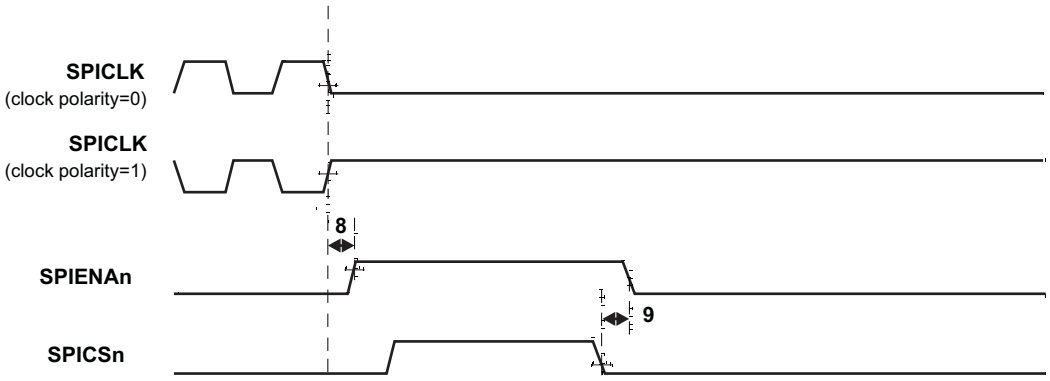

Figure 7-20. SPI Slave Mode Enable Timing (CLOCK PHASE = 0)

Copyright © 2012–2015, Texas Instruments Incorporated

Table 7-38. SPI Slave Mode External Timing Parameters (CLOCK PHASE = 1, SPICLK = input, SPISIMO = input, and SPISOMI = output)(1)(2)(3)(4)

NO.	Parameter		MIN	MAX	Unit
1	$t_{c(SPC)S}$	Cycle time, SPICLK(5)	40		ns
2(6)	$t_{w(SPCH)S}$	Pulse duration, SPICLK high (clock polarity = 0)	14		ns
	$t_{w(SPCL)S}$	Pulse duration, SPICLK low (clock polarity = 1)	14		
3(6)	$t_{w(SPCL)S}$	Pulse duration, SPICLK low (clock polarity = 0)	14		ns
	$t_{w(SPCH)S}$	Pulse duration, SPICLK high (clock polarity = 1)	14		
4(6)	$t_{d(SOMI-SPCL)S}$	Delay time, SPISOMI data valid after SPICLK low (clock polarity = 0)		$t_{rf(SOMI)}$ + 20	ns
	$t_{d(SOMI-SPCH)S}$	Delay time, SPISOMI data valid after SPICLK high (clock polarity = 1)		$t_{rf(SOMI)}$ + 20	
5(6)	$t_{h(SPCL-SOMI)S}$	Hold time, SPISOMI data valid after SPICLK high (clock polarity =0)	2		ns
	$t_{h(SPCH-SOMI)S}$	Hold time, SPISOMI data valid after SPICLK low (clock polarity =1)	2		
6(6)	$t_{su(SIMO-SPCH)S}$	Setup time, SPISIMO before SPICLK high (clock polarity = 0)	4		ns
	$t_{su(SIMO-SPCL)S}$	Setup time, SPISIMO before SPICLK low (clock polarity = 1)	4		
7(6)	$t_{v(SPCH-SIMO)S}$	High time, SPISIMO data valid after SPICLK high (clock polarity = 0)	2		ns
	$t_{v(SPCL-SIMO)S}$	High time, SPISIMO data valid after SPICLK low (clock polarity = 1)	2		
8	$t_{d(SPCH-SENAH)S}$	Delay time, SPIENAn high after last SPICLK high (clock polarity = 0)	$1.5t_{c(VCLK)}$	$2.5t_{c(VCLK)}+t_{r(ENAn)}$ + 22	ns
	$t_{d(SPCL-SENAH)S}$	Delay time, SPIENAn high after last SPICLK low (clock polarity = 1)	$1.5t_{c(VCLK)}$	$2.5t_{c(VCLK)}+t_{r(ENAn)}$ + 22	
9	$t_{d(SCSL-SENAL)S}$	Delay time, SPIENAn low after SPICSn low (if new data has been written to the SPI buffer)	$t_{f(ENAn)}$	$t_{c(VCLK)}+t_{f(ENAn)}$+ 27	ns
10	$t_{d(SCSL-SOMI)S}$	Delay time, SOMI valid after SPICSn low (if new data has been written to the SPI buffer)	$t_{c(VCLK)}$	$2t_{c(VCLK)}+t_{rf(SOMI)}$+ 28	ns

(1) The MASTER bit (SPIGCR1.0) is cleared and the CLOCK PHASE bit (SPIFMTx.16) is set.
(2) If the SPI is in slave mode, the following must be true: tc(SPC)S ≤ (PS + 1) tc(VCLK), where PS = prescale value set in SPIFMTx.[15:8].
(3) For rise and fall timings, see Table 5-8.
(4) $t_{c(VCLK)}$ = interface clock cycle time = 1 /$f_{(VCLK)}$
(5) When the SPI is in Slave mode, the following must be true:
For PS values from 1 to 255: $t_{c(SPC)S} \geq (PS + 1)t_{c(VCLK)} \geq 40ns$, where PS is the prescale value set in the SPIFMTx.[15:8] register bits.
For PS values of 0: $t_{c(SPC)S} = 2t_{c(VCLK)} \geq 40ns$.
(6) The active edge of the SPICLK signal referenced is controlled by the CLOCK POLARITY bit (SPIFMTx.17).

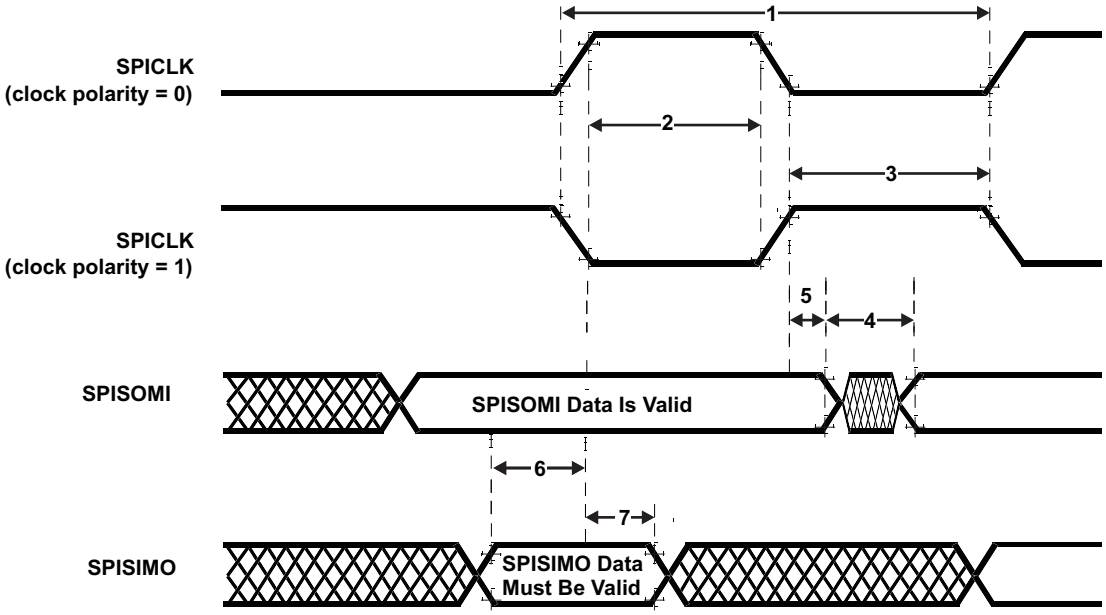

Figure 7-21. SPI Slave Mode External Timing (CLOCK PHASE = 1)

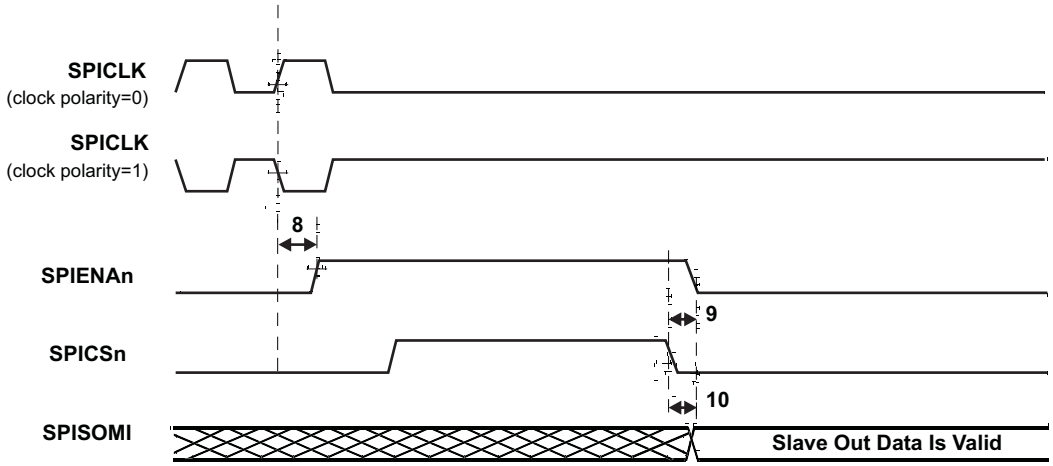

Figure 7-22. SPI Slave Mode Enable Timing (CLOCK PHASE = 1)

Copyright © 2012–2015, Texas Instruments Incorporated

8 Device and Documentation Support

8.1 Device and Development-Support Tool Nomenclature

To designate the stages in the product development cycle, TI assigns prefixes to the part numbers of all devices and support tools. Each commercial family member has one of three prefixes: TMX, TMP, or TMS (for example,TMS570LS1225). Texas Instruments recommends two of three possible prefix designators for its support tools: TMDX and TMDS. These prefixes represent evolutionary stages of product development from engineering prototypes (TMX/TMDX) through fully qualified production devices/tools (TMS/TMDS).

Device development evolutionary flow:

TMX Experimental device that is not necessarily representative of the final device's electrical specifications.

TMP Final silicon die that conforms to the device's electrical specifications but has not completed quality and reliability verification.

TMS Fully-qualified production device.

TMX and TMP devices are shipped against the following disclaimer:

"Developmental product is intended for internal evaluation purposes."

TMS devices have been characterized fully, and the quality and reliability of the device have been demonstrated fully. TI's standard warranty applies.

Predictions show that prototype devices (TMX or TMP) have a greater failure rate than the standard production devices. Texas Instruments recommends that these devices not be used in any production system because their expected end-use failure rate still is undefined. Only qualified production devices are to be used.

The figure below illustrates the numbering and symbol nomenclature for the TMS570LS1225 .

Full Part #	TMS	570	LS	12	2	5	B	ZWT	Q	Q1	R
Orderable Part #	TMX	570		12	2	5	B	ZWT	Q	Q1	R

Prefix: TM
TMS = Fully Qualified
TMP = Prototype
TMX = Samples

Core Technology:
570 = Cortex R4F

Architecture:
LS = Dual CPUs in Lockstep
(not included in orderable part #)

Flash Memory Size:
12 = 1.25MB

RAM MemorySize:
2 = 192kB

Peripheral Set:
5 = FlexRay

Die Revision:
A = Die Revision A
B = Die Revision B

Package Type:
ZWT = 337-Pin Plastic BGA with pb-free solder ball
PGE = 144 Pin Plastic Quad Flatpack

Temperature Range:
Q = -40...+125°C

Quality Designator:
Q1 = Automotive

Shipping Options:
R = Tape and Reel

Figure 8-1. TMS570LS1225 Device Numbering Conventions

Copyright © 2012–2015, Texas Instruments Incorporated

8.2 Documentation Support

8.2.1 Related Documentation from Texas Instruments

The following documents describe the *TMS570LS11x/12x* microcontroller..

SPNU515 ***TMS570LS12x/11x 16/32-Bit RISC Flash Microcontroller Technical Reference Manual*** details the integration, the environment, the functional description, and the programming models for each peripheral and subsystem in the device.

SPNZ199 ***TMS570LS12x/11x Microcontroller, Silicon Revision B, Silicon Errata*** describes the usage notes and known exceptions to the functional specifications for the device silicon revision B.

SPNZ218 ***TMS570LS12x/11x Microcontroller, Silicon Revision C, Silicon Errata*** describes the usage notes and known exceptions to the functional specifications for the device silicon revision C.

8.2.2 Community Resources

The following links connect to TI community resources. Linked contents are provided "AS IS" by the respective contributors. They do not constitute TI specifications and do not necessarily reflect TI's views; see TI's Terms of Use.

TI E2E™ Online Community ***TI's Engineer-to-Engineer (E2E) Community.*** Created to foster collaboration among engineers. At e2e.ti.com, you can ask questions, share knowledge, explore ideas and help solve problems with fellow engineers.

TI Embedded Processors Wiki ***Texas Instruments Embedded Processors Wiki.*** Established to help developers get started with Embedded Processors from Texas Instruments and to foster innovation and growth of general knowledge about the hardware and software surrounding these devices.

8.3 Trademarks

E2E is a trademark of Texas Instruments.
CoreSight is a trademark of ARM Limited.
ARM, Cortex are registered trademarks of ARM Limited (or its subsidiaries) in the EU and/or elsewhere.
All rights reserved.
All other trademarks are the property of their respective owners.

8.4 Electrostatic Discharge Caution

This integrated circuit can be damaged by ESD. Texas Instruments recommends that all integrated circuits be handled with appropriate precautions. Failure to observe proper handling and installation procedures can cause damage.

ESD damage can range from subtle performance degradation to complete device failure. Precision integrated circuits may be more susceptible to damage because very small parametric changes could cause the device not to meet its published specifications.

8.5 Glossary

SLYZ022 — *TI Glossary*.

This glossary lists and explains terms, acronyms, and definitions.

8.6 Device Identification

8.6.1 Device Identification Code Register

The device identification code register identifies several aspects of the device including the silicon version. The details of the device identification code register are shown in Table 8-1. The device identification code register value for this device is:

- Rev A = 0x8046AD05
- Rev B = 0x8046AD15
- Rev C = 0x8046AD1D

Figure 8-2. Device ID Bit Allocation Register

31	30	29	28	27	26	25	24	23	22	21	20	19	18	17	16
CP-15	UNIQUE ID														TECH
R-1	R-00000000100011														R-0

15	14	13	12	11	10	9	8	7	6	5	4	3	2	1	0
TECH			I/O VOLTAGE	PERIPH PARITY	FLASH ECC		RAM ECC	VERSION					1	0	1
R-101			R-0	R-1	R-10		R-1	R-00011					R-1	R-0	R-1

LEGEND: R/W = Read/Write; R = Read only; -*n* = value after reset

Table 8-1. Device ID Bit Allocation Register Field Descriptions

Bit	Field	Value	Description
31	CP15	1	Indicates the presence of coprocessor 15 CP15 present
30-17	UNIQUE ID	100011	Unique device identification number This bitfield holds a unique number for a dedicated device configuration (die).
16-13	TECH	0101	Process technology on which the device is manufactured. F021
12	I/O VOLTAGE	0	I/O voltage of the device. I/O are 3.3v
11	PERIPHERAL PARITY	1	Peripheral Parity Parity on peripheral memories
10-9	FLASH ECC	10	Flash ECC Program memory with ECC
8	RAM ECC	1	Indicates if RAM memory ECC is present. ECC implemented
7-3	REVISION		Revision of the Device.
2-0	101		The platform family ID is always 0b101

8.6.2 Die Identification Registers

The two die ID registers at addresses 0xFFFFFF7C and 0xFFFFFF80 form a 64-bit dieid with the information as shown in Table 8-2.

Table 8-2. Die-ID Registers

Item	# of Bits	Bit Location
X Coordinate on Wafer	12	0xFFFFFF7C[11:0]
Y Coordinate on Wafer	12	0xFFFFFF7C[23:12]
Wafer #	8	0xFFFFFF7C[31:24]
Lot #	24	0xFFFFFF80[23:0]

Copyright © 2012–2015, Texas Instruments Incorporated

Table 8-2. Die-ID Registers (continued)

Item	# of Bits	Bit Location
Reserved	8	0xFFFFFF80[31:24]

8.7 Module Certifications

The following communications modules have received certification of adherence to a standard.

Copyright © 2012–2015, Texas Instruments Incorporated

8.7.1 FlexRay™ Certifications

FlexRay™ Protocol Conformance Certificate

Device (IUT):

Name: TMS570LS1115 Rev B , TMS570LS1225 Rev B
TMS570LS1227 Rev B

Package: ZWT (S-PBGA-N337) Plastic Ball Grid Array

Version: Core Release Register: 0x10390206 (CREL[31:0])
Device Identification Code: 0x8046AD15 (DEVID[31:0])

Vendor: Texas Instruments Incorporated
12500 TI Boulevard
Dallas, Texas 75243
USA

Test basis:

FlexRay™ protocol version: 2.1 / 2.1RevA
Test specification version: 2.1.2

Test execution:

Date: 12.06.2013
Hour of completion: 10:44

Test results:

Test cases executed: 275
Test cases passed: 275
Test cases failed: 0

Test report:

Execution ID:
TMX570LS1227BZWT1371026668968

Essen, 18.06.2013

Heiko Ehrich

TÜV NORD Mobilität GmbH & Co.KG
Institute for Vehicle Technology and Mobility

IUT-Details – According to the vendor's data sheet, the IUT has the following peculiarities and optional features:

Peculiarity	Value
MTS transmission activation adjustment time-string	0:x:x:0:0:0
MTS transmission deactivation adjustment time-string	0:x:x:0:0:0
MTS transmission deactivation required	False
cIntDecoderDelay [ST]	8
cColdstartCollisionAbortDelay [µT]	10
Message ID filtering impl. Via valid message indicator	False

Optional feature	Supported/Unsupported
Message ID filtering	Unsupported
Relative timer	Supported
Network Management Vector	Supported
(Re)setting of the 'transmit buffer valid flag'	Supported

This certificate is valid for the hardware and software configuration documented in the test report.

TÜV NORD Mobilität

Figure 8-3. Flexray Certification for ZWT Package

FlexRay™ Protocol Conformance Certificate

Device (IUT):

Name: TMS570LS1115 Rev B , TMS570LS1225 Rev B
TMS570LS1227 Rev B

Package: PGE (S-PQFP-G144) Plastic Quat Flatpack

Version: Core Release Register: 0x10390206 (CREL[31:0])
Device Identification Code: 0x8046AD15 (DEVID[31:0])

Vendor: Texas Instruments Incorporated
12500 TI Boulevard
Dallas, Texas 75243
USA

Test basis:

FlexRay™ protocol version: 2.1 / 2.1RevA
Test specification version: 2.1.2

Test execution:

Date: 09.06.2013
Hour of completion: 12:17

Test results:

Test cases executed: 275
Test cases passed: 275
Test cases failed: 0

Test report:

Execution ID:
TMX570LS1227BPGE1370773062086

Essen, 18.06.2013

Heiko Ehrich

TÜV NORD Mobilität GmbH & Co.KG
Institute for Vehicle Technology and Mobility

IUT-Details – According to the vendor's data sheet, the IUT has the following peculiarities and optional features:

Peculiarity	Value
MTS transmission activation adjustment time-string	0:x:x:0:0:0
MTS transmission deactivation adjustment time-string	0:x:x:0:0:0
MTS transmission deactivation required	False
cIntDecoderDelay [ST]	8
cColdstartCollisionAbortDelay [µT]	10
Message ID filtering impl. Via valid message indicator	False

Optional feature	Supported/Unsupported
Message ID filtering	Unsupported
Relative timer	Supported
Network Management Vector	Supported
(Re)setting of the 'transmit buffer valid flag'	Supported

This certificate is valid for the hardware and software configuration documented in the test report.

TÜV NORD Mobilität

Figure 8-4. Flexray Certification for PGE Package

Copyright © 2012–2015, Texas Instruments Incorporated

8.7.2 DCAN Certification

Testhouse
C&S group GmbH
Am Exer 19b
D-38302 Wolfenbuettel
Phone: +49 5331/90 555-0
Fax: +49 5331/90 555-110

C&S
CAN

Authentication
on CAN Conformance

Texas Instruments
P10_0294_021_CAN_DL_Test_Authentication_r01.doc
Date of Approval: 2011-Feb-08

C&S is worldwide recognized as a neutral expert in testing of communication systems such as CAN Transceiver, CAN, CAN Software Drivers, (CAN) Network Management, FlexRay and LIN.

Herewith C&S group is proud to confirm that the followings tests on the subsequently specified device implementations have been performed by C&S resulting in the findings given below:

C&S Conformance Test Results

Manufacturer	Texas Instruments
Component/Part Number	TMSx70 x021 Microcontroller Family, DCAN Core Release 0xA3170504, 980 A2C0007940000 X470MUF C63C1 P80576 24 YFB-08A9X6W
Date of Tests	February 2011
Version of Test Specification	CAN Conformance Test 1 ISO CAN Conformance Tests according to "ISO 16845:2004 Road vehicles - Controller area network (CAN) - Conformance test plan" and C&S enhancement/ corrections according to "CAN CONFORMANCE TESTING Test Specification C&S Version 2.0 RC" 2 C&S Register Functionality Tests according to "C&S Register Functionality Test Specification V2.0" 3 C&S Robustness Tests according to "C&S Robustness Test Specification V1.4"
Corresponding Test Report	P10_0294_020_CAN_DL_Test_report_r01
1 ISO CAN conformance tests	**Pass**
2 C&S Register Functionality tests	**Pass**
3 C&S Robustness tests	**Pass**
• Further Observations	**None**

Frank Fischer, CTO

Lothar Kukla, Project Manager

Quote No. P10_0294 R01

Figure 8-5. DCAN Certification

8.7.3 LIN Certification

8.7.3.1 LIN Master Mode

ihr

AUTOMOTIVE
Engineering
Services & Products

LOCAL INTERCONNECT NETWORK

DAkkS
Deutsche
Akkreditierungsstelle
D-PL-17201-01-01

Accredited test lab by DAkkS GmbH according DIN ISO/IEC 17025.
The accreditation is valid for all test methods stated in the certificate.

Test Summary
for
LIN 2.1 Conformance Test - Master

Client / Manufacturer:	**Texas Instruments**
	Automotive Applications
	12500 TI Boulevard
	75243 DALLAS, TEXAS
	UNITED STATES OF AMERICA
Implementation Under Test:	**Microcontroller TMS570LS3137**
Part Number:	**LIN Master Mode**
Revision:	SW: : 2013-05-31_IHR_LIN
Test Sample Marking:	TMX570LS 3137 CZWTQQ1 YFC-2AAQ32W
Test Board:	Gladiator 337 SN# 58 rev. B
Performed Tests:	**LIN OSI Layer 2 – Data Link Layer**
	Node Configuration / Network Management
Specification References:	**LIN Conformance Test Specification, 10-Oct-2008**
	for the LIN Specification Package Revision 2.1 , 24-Nov-2006
Result / Status:	**The device has *passed* the test.**
Version / Date:	1.0 / 13-May-2013
Document Number:	Test Summary_DLL21_Master_20121130_130513_TMS570LS_V1.0.doc
ihr Reference:	20121130

This test summary don't represent a complete test report according the LIN consortium.

It contains 7 pages and shall not be reproduced except in full without written approval of the *ihr* Test Center. All performed test results concerns the above mentioned IUT revision only.

ihr GmbH
Airport Boulevard B 210
D 77836 Rheinmünster
Tel.: +49 (0) 7229-18475-0
Fax. +49 (0) 7229-18475-11

Bank: Volksbank Bühl
Konto: 1376209
BLZ: 66291400
UST-Id-Nr. DE177221429

Geschäftsführer: Jörg Holzberg
Gerichtsstand: Bühl
Handelsreg.:Baden-Baden HRB908BH
eMail: info@ihr.de
Internet: www.ihr.de

Figure 8-6. LIN Certification - Master Mode

Copyright © 2012–2015, Texas Instruments Incorporated

8.7.3.2 LIN Slave Mode - Fixed Baud Rate

ihr

AUTOMOTIVE
Engineering
Services & Products

lin
LOCAL INTERCONNECT NETWORK

DAkkS
Deutsche Akkreditierungsstelle
D-PL-17201-01-01

Accredited test lab by DAkkS GmbH according DIN ISO/IEC 17025.
The accreditation is valid for all test methods stated in the certificate.

Test Summary
for
LIN 2.1 Conformance Test - Slave

Client / Manufacturer:	**Texas Instruments**
	Automotive Applications
	12500 TI Boulevard
	75243 DALLAS, TEXAS
	UNITED STATES OF AMERICA
Implementation Under Test:	**Microcontroller TMS570LS3137**
	LIN Slave Mode - Fixed Baud Rate Mode
Revision:	SW: 2013-05-31_IHR_LIN
Test Sample Marking:	TMX570LS 3137 CZWTQQ1 YFC-2AAQ32W
Test Board:	Gladiator 337 SN# 58 rev. B
Performed Tests:	**LIN OSI Layer 2 – Data Link Layer**
	Node Configuration / Network Management
Specification References:	**LIN Conformance Test Specification, 10-Oct-2008**
	for the LIN Specification Package Revision 2.1 , 24-Nov-2006
Result / Status:	**The device has *passed* the test.**
Version / Date:	1.0 / 13-May-2013
Document Number:	Test Summary_DLL21_Slave_Fixed_20121130_130513_TMS570LS_V1.0.doc
***ihr** Reference:*	20121130

This test summary don't represent a complete test report according the LIN consortium.

It contains 16 pages and shall not be reproduced except in full without written approval of the ***ihr*** Test Center.

All performed test results concerns the above mentioned IUT revision only.

ihr GmbH
Airport Boulevard B 210
D 77836 Rheinmünster
Tel.: +49 (0) 7229-18475-0
Fax. +49 (0) 7229-18475-11

Bank: Volksbank Bühl
Konto: 1376209
BLZ: 66291400
UST-Id-Nr. DE177221429

Geschäftsführer: Jörg Holzberg
Gerichtsstand: Bühl
Handelsreg.:Baden-Baden HRB908BH
eMail: info@ihr.de
Internet: www.ihr.de

Figure 8-7. LIN Certification - Slave Mode - Fixed Baud Rate

8.7.3.3 LIN Slave Mode - Adaptive Baud Rate

ihr

AUTOMOTIVE
Engineering
Services & Products

LOCAL INTERCONNECT NETWORK

DAkkS
Deutsche
Akkreditierungsstelle
D-PL-17201-01-01

Accredited test lab by DAkkS GmbH according DIN ISO/IEC 17025.
The accreditation is valid for all test methods stated in the certificate.

Test Summary
for
LIN 2.1 Conformance Test - Slave

Client / Manufacturer:	**Texas Instruments**
	Automotive Applications
	12500 TI Boulevard
	75243 DALLAS, TEXAS
	UNITED STATES OF AMERICA
Implementation Under Test:	**Microcontroller TMS570LS3137**
	LIN Slave Mode - Adaptive Baud Rate Mode
Revision:	SW: 2013-05-31_IHR_LIN
Test Sample Marking:	TMX570LS 3137 CZWTQQ1 YFC-2AAQ32W
Test Board:	Gladiator 337 SN# 58 rev. B
Performed Tests:	**LIN OSI Layer 2 – Data Link Layer**
	Node Configuration / Network Management
Specification References:	**LIN Conformance Test Specification, 10-Oct-2008**
	for the LIN Specification Package Revision 2.1 , 24-Nov-2006
Result / Status:	**The device has *passed* the test.**
Version / Date:	1.0 / 13-May-2013
Document Number:	Test Summary_DLL21_Slave_Adapt_TI_TMS570LS_130513_V1.0.doc
***ihr** Reference:*	20121130

This test summary don't represent a complete test report according the LIN consortium.

It contains 16 pages and shall not be reproduced except in full without written approval of the ***ihr*** Test Center.

All performed test results concerns the above mentioned IUT revision only.

ihr GmbH
Airport Boulevard B 210
D 77836 Rheinmünster
Tel.: +49 (0) 7229-18475-0
Fax. +49 (0) 7229-18475-11

Bank: Volksbank Bühl
Konto: 1376209
BLZ: 66291400
UST-Id-Nr. DE177221429

Geschäftsführer: Jörg Holzberg
Gerichtsstand: Bühl
Handelsreg.:Baden-Baden HRB908BH
eMail: info@ihr.de
Internet: www.ihr.de

Figure 8-8. LIN Certification - Slave Mode - Adaptive Baud Rate

Copyright © 2012–2015, Texas Instruments Incorporated

9 Mechanical Packaging and Orderable Information

9.1 Packaging Information

The following pages include mechanical packaging and orderable information. This information is the most current data available for the designated devices. This data is subject to change without notice and without revision of this document. For browser-based versions of this data sheet, refer to the left-hand navigation.

PACKAGING INFORMATION

Orderable part number	Status (1)	Material type (2)	Package | Pins	Package qty | Carrier	RoHS (3)	Lead finish/ Ball material (4)	MSL rating/ Peak reflow (5)	Op temp (°C)	Part marking (6)
TMS5701225CPGEQQ1	Active	Production	LQFP (PGE) | 144	60 | JEDEC TRAY (5+1)	Yes	NIPDAU	Level-3-260C-168 HR	-40 to 125	TMS570LS 1225CPGEQQ1
TMS5701225CPGEQQ1.B	Active	Production	LQFP (PGE) | 144	60 | JEDEC TRAY (5+1)	Yes	NIPDAU	Level-3-260C-168 HR	-40 to 125	TMS570LS 1225CPGEQQ1

(1) **Status:** For more details on status, see our product life cycle.

(2) **Material type:** When designated, preproduction parts are prototypes/experimental devices, and are not yet approved or released for full production. Testing and final process, including without limitation quality assurance, reliability performance testing, and/or process qualification, may not yet be complete, and this item is subject to further changes or possible discontinuation. If available for ordering, purchases will be subject to an additional waiver at checkout, and are intended for early internal evaluation purposes only. These items are sold without warranties of any kind.

(3) **RoHS values:** Yes, No, RoHS Exempt. See the TI RoHS Statement for additional information and value definition.

(4) **Lead finish/Ball material:** Parts may have multiple material finish options. Finish options are separated by a vertical ruled line. Lead finish/Ball material values may wrap to two lines if the finish value exceeds the maximum column width.

(5) **MSL rating/Peak reflow:** The moisture sensitivity level ratings and peak solder (reflow) temperatures. In the event that a part has multiple moisture sensitivity ratings, only the lowest level per JEDEC standards is shown. Refer to the shipping label for the actual reflow temperature that will be used to mount the part to the printed circuit board.

(6) **Part marking:** There may be an additional marking, which relates to the logo, the lot trace code information, or the environmental category of the part.

Multiple part markings will be inside parentheses. Only one part marking contained in parentheses and separated by a "~" will appear on a part. If a line is indented then it is a continuation of the previous line and the two combined represent the entire part marking for that device.

Important Information and Disclaimer: The information provided on this page represents TI's knowledge and belief as of the date that it is provided. TI bases its knowledge and belief on information provided by third parties, and makes no representation or warranty as to the accuracy of such information. Efforts are underway to better integrate information from third parties. TI has taken and continues to take reasonable steps to provide representative and accurate information but may not have conducted destructive testing or chemical analysis on incoming materials and chemicals. TI and TI suppliers consider certain information to be proprietary, and thus CAS numbers and other limited information may not be available for release.

In no event shall TI's liability arising out of such information exceed the total purchase price of the TI part(s) at issue in this document sold by TI to Customer on an annual basis.

TRAY

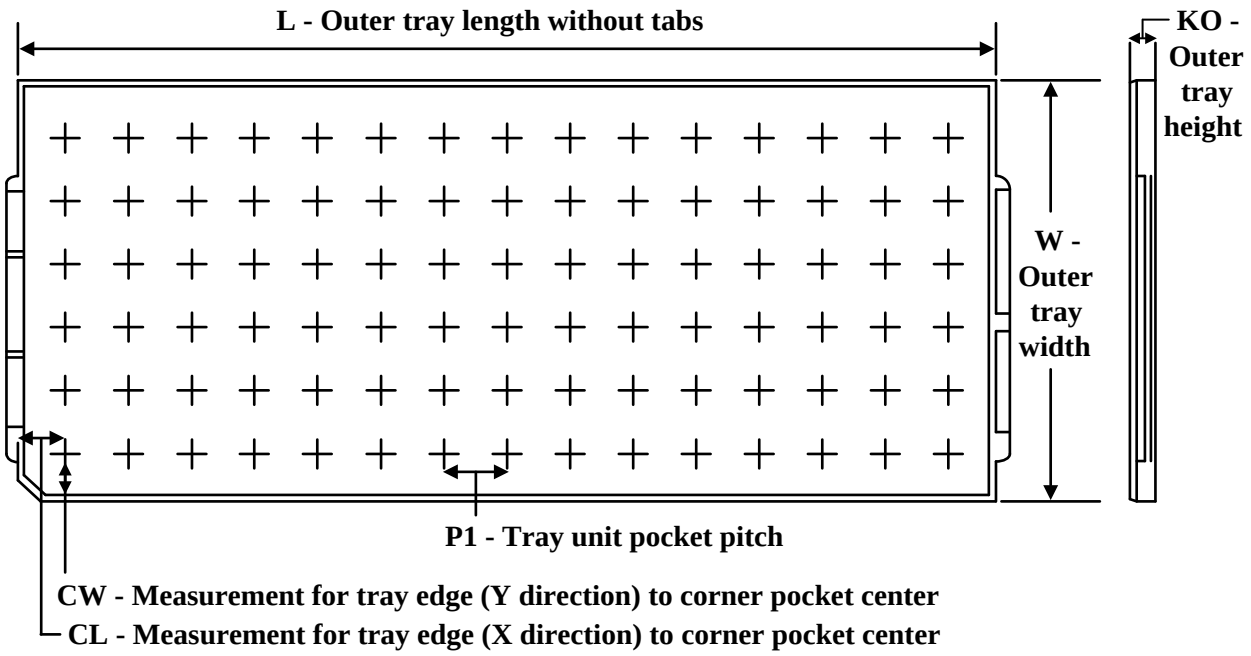

Chamfer on Tray corner indicates Pin 1 orientation of packed units.

*All dimensions are nominal

Device	Package Name	Package Type	Pins	SPQ	Unit array matrix	Max temperature (°C)	L (mm)	W (mm)	K0 (µm)	P1 (mm)	CL (mm)	CW (mm)
TMS5701225CPGEQQ1	PGE	LQFP	144	60	5X12	150	315	135.9	7620	25.4	17.8	17.55
TMS5701225CPGEQQ1.B	PGE	LQFP	144	60	5X12	150	315	135.9	7620	25.4	17.8	17.55

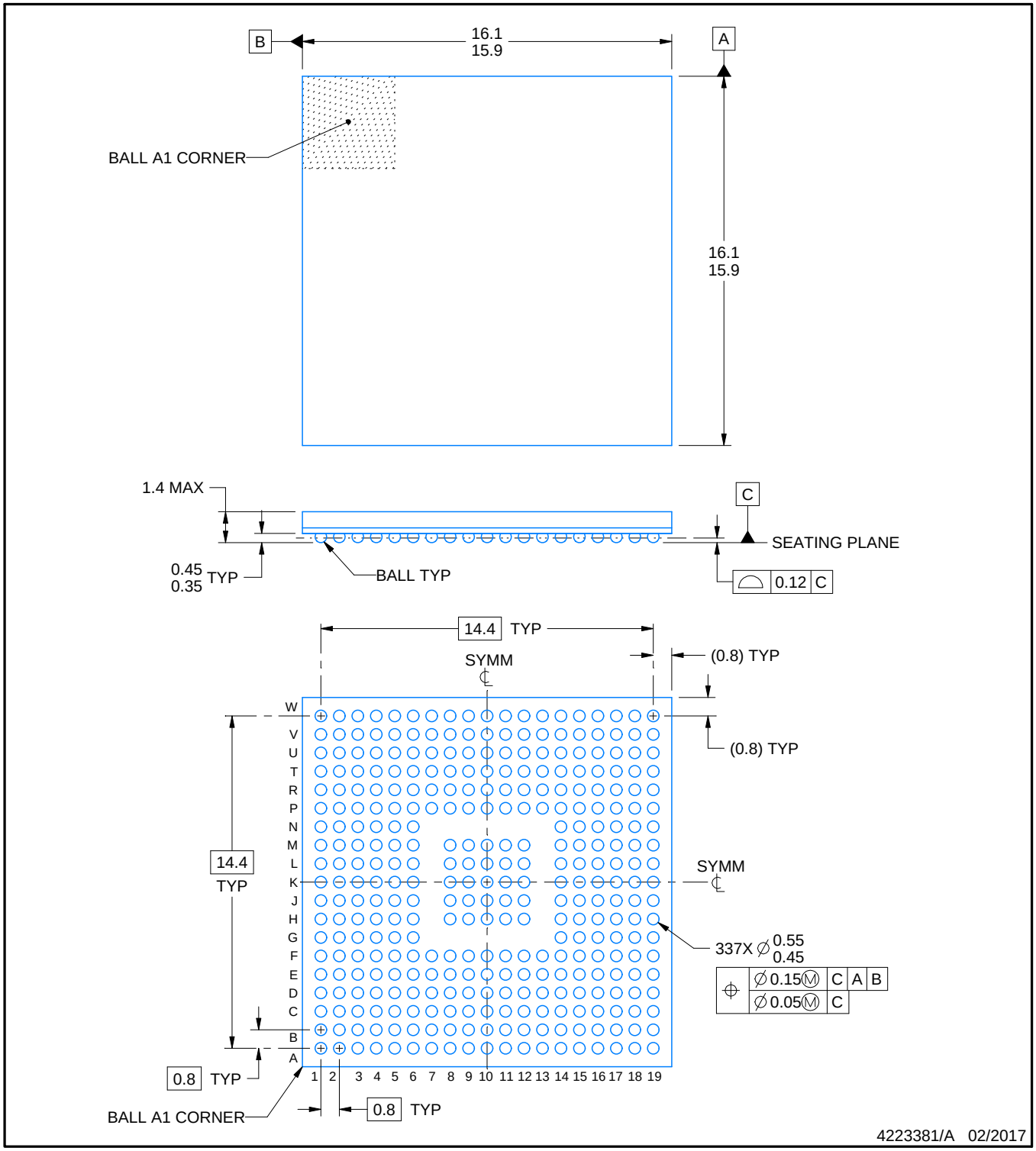

NOTES:

1. All linear dimensions are in millimeters. Any dimensions in parenthesis are for reference only. Dimensioning and tolerancing per ASME Y14.5M.
2. This drawing is subject to change without notice.

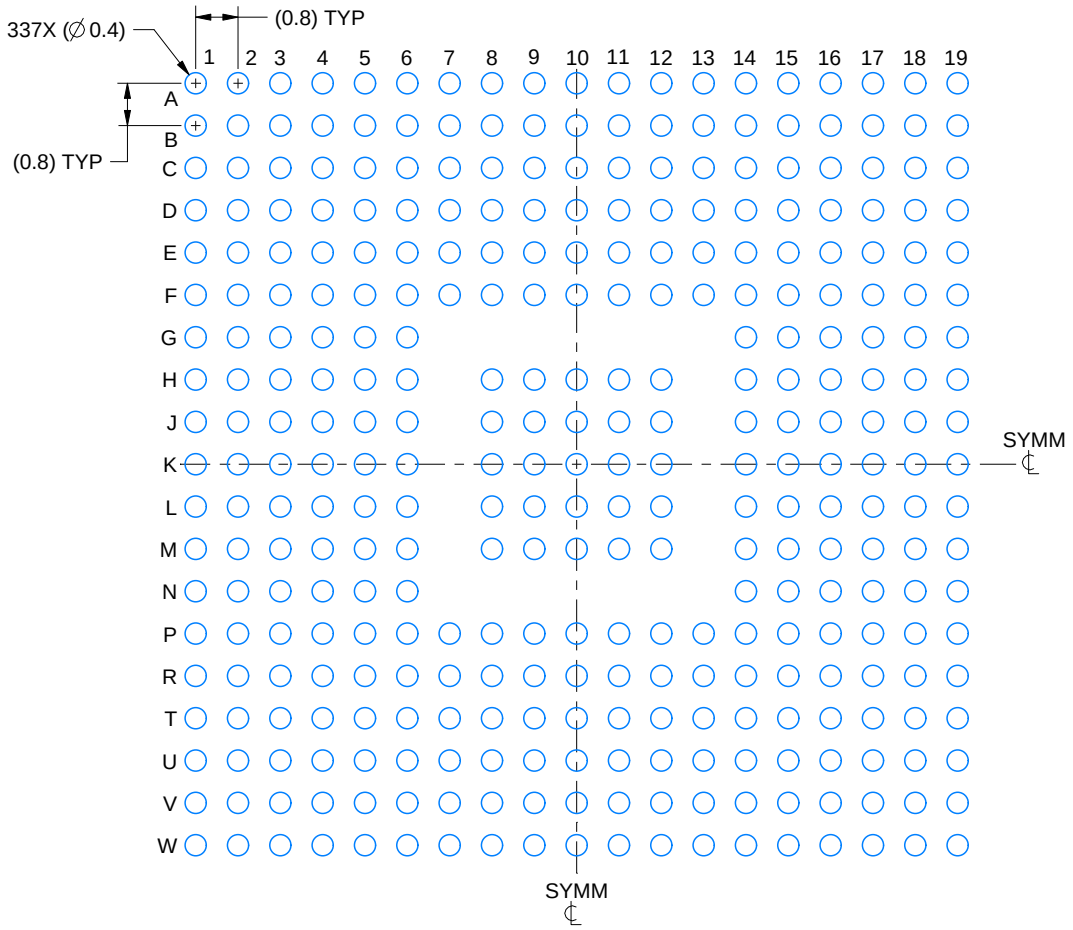

LAND PATTERN EXAMPLE
EXPOSED METAL SHOWN
SCALE:7X

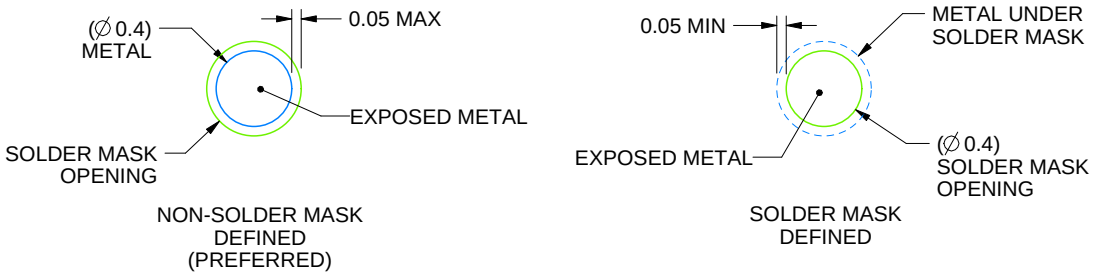

SOLDER MASK DETAILS
NOT TO SCALE

4223381/A 02/2017

NOTES: (continued)

3. Final dimensions may vary due to manufacturing tolerance considerations and also routing constraints.
For information, see Texas Instruments literature number SPRAA99 (www.ti.com/lit/spraa99).

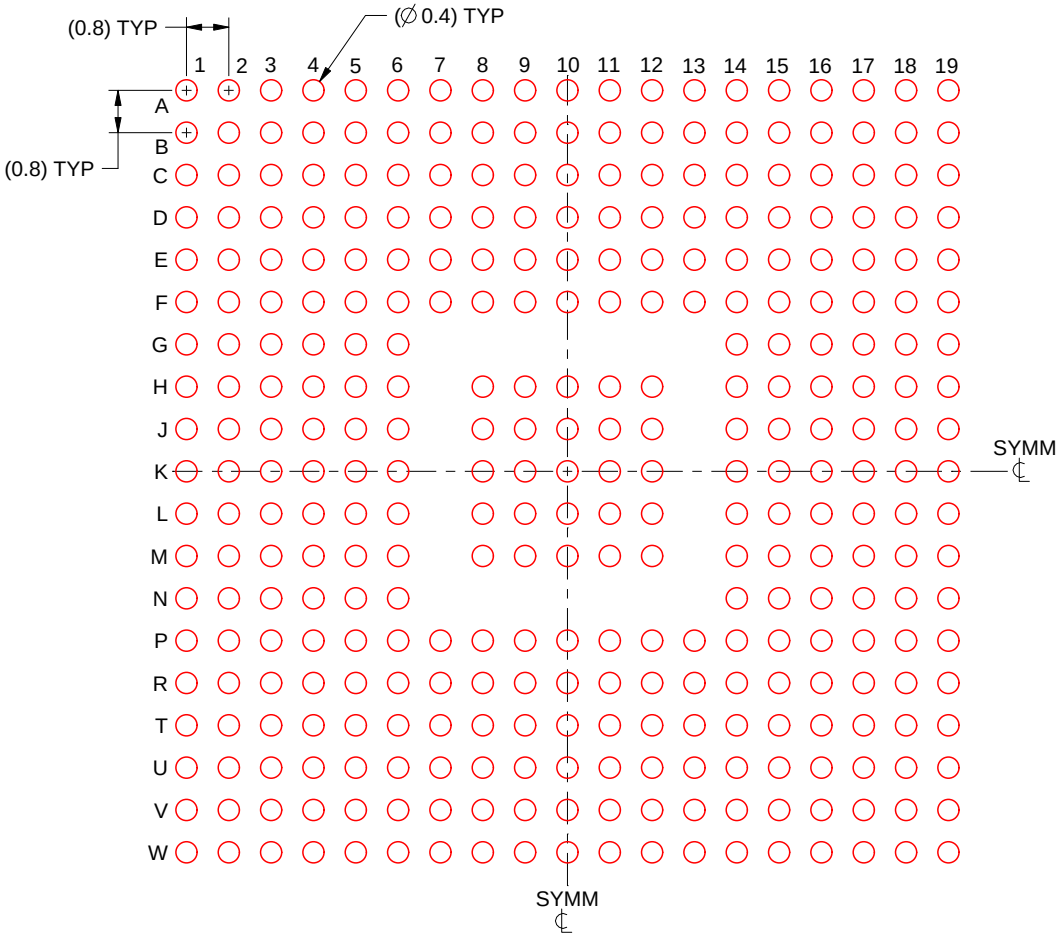

SOLDER PASTE EXAMPLE
BASED ON 0.15 mm THICK STENCIL
SCALE:7X

4223381/A 02/2017

NOTES: (continued)

4. Laser cutting apertures with trapezoidal walls and rounded corners may offer better paste release.

PGE (S-PQFP-G144) **PLASTIC QUAD FLATPACK**

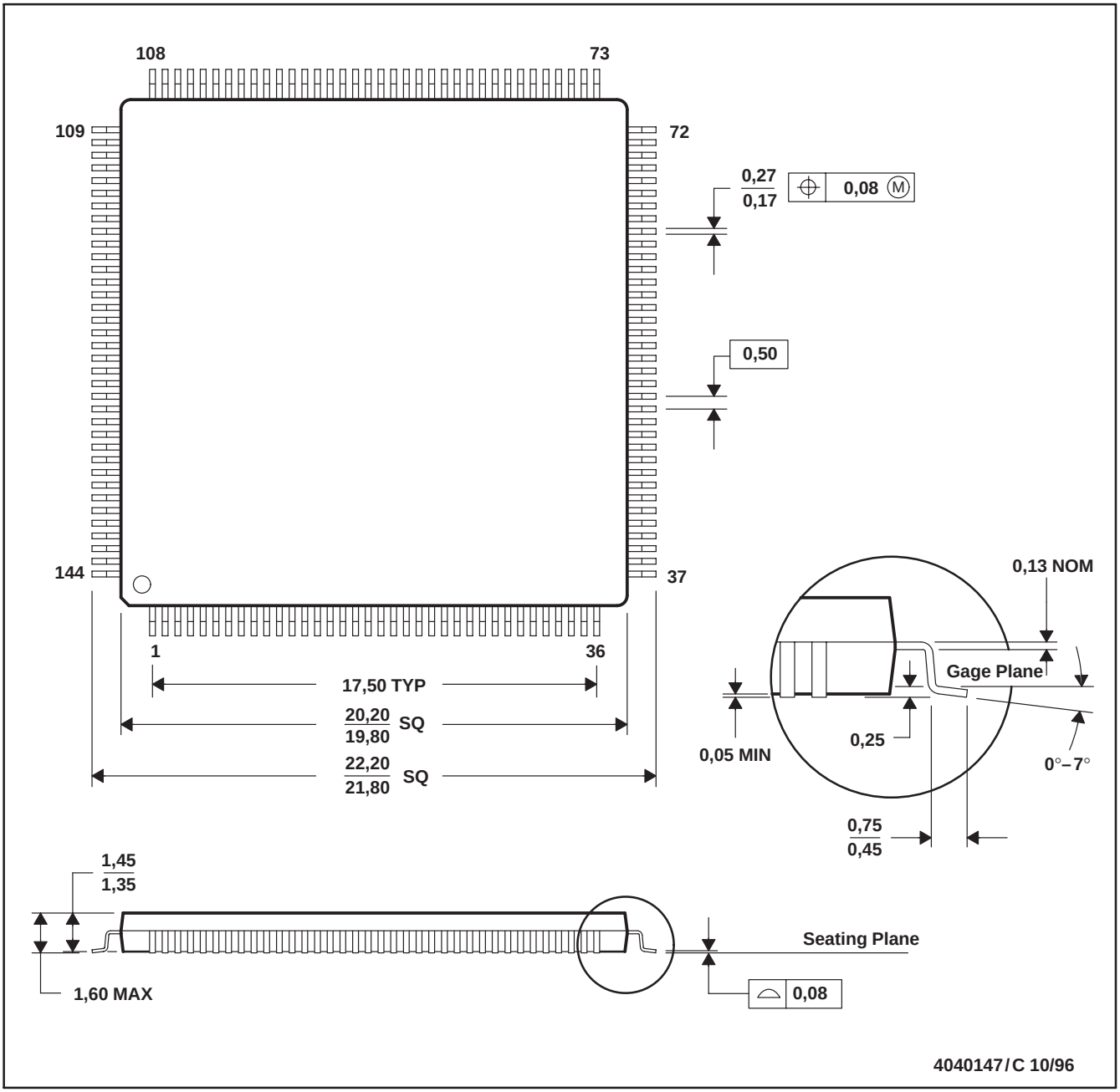

NOTES: A. All linear dimensions are in millimeters.
B. This drawing is subject to change without notice.
C. Falls within JEDEC MS-026

IMPORTANT NOTICE AND DISCLAIMER

TI PROVIDES TECHNICAL AND RELIABILITY DATA (INCLUDING DATASHEETS), DESIGN RESOURCES (INCLUDING REFERENCE DESIGNS), APPLICATION OR OTHER DESIGN ADVICE, WEB TOOLS, SAFETY INFORMATION, AND OTHER RESOURCES “AS IS” AND WITH ALL FAULTS, AND DISCLAIMS ALL WARRANTIES, EXPRESS AND IMPLIED, INCLUDING WITHOUT LIMITATION ANY IMPLIED WARRANTIES OF MERCHANTABILITY, FITNESS FOR A PARTICULAR PURPOSE OR NON-INFRINGEMENT OF THIRD PARTY INTELLECTUAL PROPERTY RIGHTS.

These resources are intended for skilled developers designing with TI products. You are solely responsible for (1) selecting the appropriate TI products for your application, (2) designing, validating and testing your application, and (3) ensuring your application meets applicable standards, and any other safety, security, regulatory or other requirements.

These resources are subject to change without notice. TI grants you permission to use these resources only for development of an application that uses the TI products described in the resource. Other reproduction and display of these resources is prohibited. No license is granted to any other TI intellectual property right or to any third party intellectual property right. TI disclaims responsibility for, and you fully indemnify TI and its representatives against any claims, damages, costs, losses, and liabilities arising out of your use of these resources.

TI’s products are provided subject to TI’s Terms of Sale, TI’s General Quality Guidelines, or other applicable terms available either on ti.com or provided in conjunction with such TI products. TI’s provision of these resources does not expand or otherwise alter TI’s applicable warranties or warranty disclaimers for TI products. Unless TI explicitly designates a product as custom or customer-specified, TI products are standard, catalog, general purpose devices.

TI objects to and rejects any additional or different terms you may propose.

Copyright © 2025, Texas Instruments Incorporated

Last updated 10/2025