MSP430FR2433 Mixed-Signal Microcontroller

1 Device Overview

1.1 Features

- Embedded microcontroller
  - 16-bit RISC architecture
  - Clock supports frequencies up to 16 MHz
  - Wide supply voltage range from 3.6 V down to 1.8 V (minimum supply voltage is restricted by SVS levels, see the SVS specifications)
- Optimized ultra-low-power modes
  - Active mode: 126 µA/MHz (typical)
  - Standby: <1 µA with VLO
  - LPM3.5 real-time clock (RTC) counter with 32768-Hz crystal: 730 nA (typical)
  - Shutdown (LPM4.5): 16 nA (typical)
- High-performance analog
  - 8-channel 10-bit analog-to-digital converter (ADC)
    - Internal 1.5-V reference
    - Sample-and-hold 200 ksps
- Enhanced serial communications
  - Two enhanced universal serial communication interfaces (eUSCI_A) support UART, IrDA, and SPI
  - One eUSCI (eUSCI_B) supports SPI and I^2C
- Intelligent digital peripherals
  - Four 16-bit timers
    - Two timers with three capture/compare registers each (Timer_A3)
    - Two timers with two capture/compare registers each (Timer_A2)
  - One 16-bit counter-only RTC
  - 16-bit cyclic redundancy check (CRC)
- Low-power ferroelectric RAM (FRAM)
  - Up to 15.5KB of nonvolatile memory
  - Built-in error correction code (ECC)
  - Configurable write protection
  - Unified memory of program, constants, and storage
  - 10^{15} write cycle endurance
  - Radiation resistant and nonmagnetic
  - High FRAM-to-SRAM ratio, up to 4:1
- Clock system (CS)
  - On-chip 32-kHz RC oscillator (REFO)
  - On-chip 16-MHz digitally controlled oscillator (DCO) with frequency-locked loop (FLL)
    - ±1% accuracy with on-chip reference at room temperature
  - On-chip very low-frequency 10-kHz oscillator (VLO)
  - On-chip high-frequency modulation oscillator (MODOSC)
  - External 32-kHz crystal oscillator (LFXT)
  - Programmable MCLK prescalar of 1 to 128
  - SMCLK derived from MCLK with programmable prescalar of 1, 2, 4, or 8
- General input/output and pin functionality
  - Total of 19 I/Os on VQFN-24 package
  - 16 interrupt pins (P1 and P2) can wake MCU from low-power modes
- Development tools and software
  - Development tools
    - LaunchPad™ development kit (MSP-EXP430FR2433)
    - Target development board (MSP-TS430RGE24A)
- Family member (also see Device Comparison)
  - MSP430FR2433: 15KB of program FRAM, 512B of information FRAM, 4KB of RAM
- Package options
  - 24 pin: VQFN (RGE)
  - 24-pin: DSBGA (YQW)

1.2 Applications

- Small form factor industrial sensors
- Low-power medical, health, and fitness
- Electronic door locks
- Energy harvesting

1.3 Description

The MSP430FR2433 microcontroller (MCU) is part of the MSP430™ Value Line sensing portfolio, TI's lowest-cost family of MCUs for sensing and measurement applications. The architecture, FRAM, and integrated peripherals, combined with extensive low-power modes, are optimized to achieve extended battery life in portable and battery-powered sensing applications in a small VQFN package (4 mm × 4 mm).

An IMPORTANT NOTICE at the end of this data sheet addresses availability, warranty, changes, use in safety-critical applications, intellectual property matters and other important disclaimers. PRODUCTION DATA.

TI's MSP430 ultra-low-power FRAM microcontroller platform combines uniquely embedded FRAM and a holistic ultra-low-power system architecture, allowing system designers to increase performance while lowering energy consumption. FRAM technology combines the low-energy fast writes, flexibility, and endurance of RAM with the nonvolatility of flash.

The MSP430FR2433 MCU is supported by an extensive hardware and software ecosystem with reference designs and code examples to get your design started quickly. Development kits include the MSP-EXP430FR2433 LaunchPad™ development kit and the MSP-TS430RGE24A 24-pin target development board. TI also provides free MSP430Ware™ software, which is available as a component of Code Composer Studio™ IDE desktop and cloud versions within TI Resource Explorer. The MSP430 MCUs are also supported by extensive online collateral, training, and online support through the E2E™ support forums.

For complete module descriptions, see the *MSP430FR4xx and MSP430FR2xx Family User's Guide*.

Device Information(1)

PART NUMBER	PACKAGE	BODY SIZE(2)
MSP430FR2433IRGE	VQFN (24)	4 mm × 4 mm
MSP430FR2433IYQW	DSBGA (24)	2.29 mm × 2.34 mm

(1) For the most current part, package, and ordering information, see the *Package Option Addendum* in Section 9, or see the TI website at www.ti.com.
(2) The sizes shown here are approximations. For the package dimensions with tolerances, see the *Mechanical Data* in Section 9.

CAUTION

System-level ESD protection must be applied in compliance with the device-level ESD specification to prevent electrical overstress or disturbing of data or code memory. See *MSP430 System-Level ESD Considerations* for more information.

Copyright © 2015–2019, Texas Instruments Incorporated

1.4 Functional Block Diagram

Figure 1-1 shows the functional block diagram.

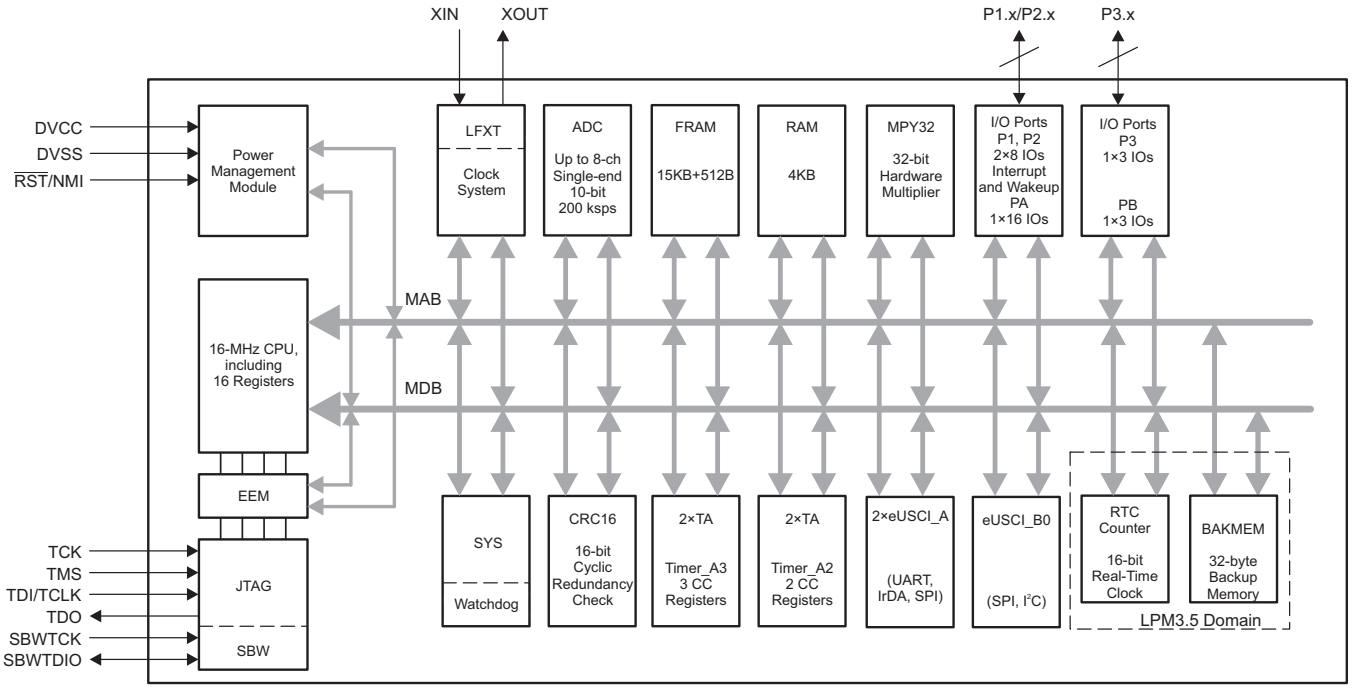

Figure 1-1. Functional Block Diagram

- The MCU has one main power pair of DVCC and DVSS that supplies digital and analog modules. Recommended bypass and decoupling capacitors are 4.7 µF to 10 µF and 0.1 µF, respectively, with ±5% accuracy.
- P1 and P2 feature the pin interrupt function and can wake up the MCU from all LPMs, including LPM3.5 and LPM4.
- Each Timer_A3 has three capture/compare registers, but only CCR1 and CCR2 are externally connected. CCR0 registers can be used only for internal period timing and interrupt generation.
- Each Timer_A2 has two capture/compare registers, but only CCR1 is a compare/capture functionality. CCR0 registers can be used only for internal period timing and interrupt generation.
- In LPM3.5, the RTC module can be functional while the rest of the peripherals are off.

Copyright © 2015–2019, Texas Instruments Incorporated

Table of Contents

1 Device Overview 1
1.1 Features 1
1.2 Applications 1
1.3 Description 1
1.4 Functional Block Diagram 3
2 Revision History 5
3 Device Comparison 7
3.1 Related Products 7
4 Terminal Configuration and Functions 8
4.1 Pin Diagram 8
4.2 Pin Attributes 10
4.3 Signal Descriptions 12
4.4 Pin Multiplexing 15
4.5 Buffer Types 15
4.6 Connection of Unused Pins 15
5 Specifications 16
5.1 Absolute Maximum Ratings 16
5.2 ESD Ratings 16
5.3 Recommended Operating Conditions 16
5.4 Active Mode Supply Current Into V_{CC} Excluding External Current 17
5.5 Active Mode Supply Current Per MHz 17
5.6 Low-Power Mode LPM0 Supply Currents Into V_{CC} Excluding External Current 17
5.7 Low-Power Mode (LPM3 and LPM4) Supply Currents (Into V_{CC}) Excluding External Current 18
5.8 Low-Power Mode LPMx.5 Supply Currents (Into V_{CC}) Excluding External Current 18
5.9 Typical Characteristics - Low-Power Mode Supply Currents 19
5.10 Thermal Resistance Characteristics 20
5.11 Timing and Switching Characteristics 21
6 Detailed Description 40
6.1 Overview 40
6.2 CPU 40
6.3 Operating Modes 40
6.4 Interrupt Vector Addresses 41
6.5 Bootloader (BSL) 43
6.6 JTAG Standard Interface 43
6.7 Spy-Bi-Wire Interface (SBW) 44
6.8 FRAM 44
6.9 Memory Protection 44
6.10 Peripherals 45
6.11 Input/Output Diagrams 54
6.12 Device Descriptors 60
6.13 Memory 61
6.14 Identification 69
7 Applications, Implementation, and Layout 70
7.1 Device Connection and Layout Fundamentals 70
7.2 Peripheral- and Interface-Specific Design Information 73
8 Device and Documentation Support 75
8.1 Getting Started and Next Steps 75
8.2 Device Nomenclature 75
8.3 Tools and Software 76
8.4 Documentation Support 78
8.5 Community Resources 79
8.6 Trademarks 79
8.7 Electrostatic Discharge Caution 79
8.8 Export Control Notice 79
8.9 Glossary 79
9 Mechanical, Packaging, and Orderable Information 80

Copyright © 2015–2019, Texas Instruments Incorporated

2 Revision History

NOTE: Page numbers for previous revisions may differ from page numbers in the current version.

Changes from revision E to revision F

Changes from August 20, 2019 to December 9, 2019	Page
• Changed the note that begins "Supply voltage changes faster than 0.2 V/µs can trigger a BOR reset..." in Section 5.3, *Recommended Operating Conditions*	16
• Added the note that begins "TI recommends that power to the DVCC pin must not exceed the limits..." in Section 5.3, *Recommended Operating Conditions*	16
• Changed the note that begins "A capacitor tolerance of ±20% or better is required..." in Section 5.3, *Recommended Operating Conditions*	16
• Changed the note that begins "Requires external capacitors at both terminals..." in Table 5-4, *XT1 Crystal Oscillator (Low Frequency)*	23
• Added the $t_{(int)}$ parameter in Table 5-10, *Digital Inputs*	27
• Added the $t_{TA,cap}$ parameter in Table 5-13, *Timer_A*	29
• Corrected the test conditions for the $R_{I,MUX}$ parameter in Table 5-20, *ADC, Power Supply and Input Range Conditions*	35
• Added the note that begins "$t_{Sample} = \ln(2^{n+1}) \times \tau$ ..." in Table 5-21, *ADC, 10-Bit Timing Parameters*	35
• Changed the CRC covered end address to 0x1AF5 in note (1) in Table 6-22, *Device Descriptors*	60

Changes from revision D to revision E

Changes from September 11, 2018 to August 19, 2019	Page
• Added the $t_{TA,cap}$ parameter in Table 5-13, *Timer_A*	29
• Changed the parameter symbol from R_I to $R_{I,MUX}$ in Table 5-20 , *ADC, Power Supply and Input Range Conditions*	35
• Added $R_{I,Misc}$ TYP value of 34 kΩ in Table 5-20 , *ADC, Power Supply and Input Range Conditions*	35
• Added formula for R_I calculation in Table 5-21 , *ADC, 10-Bit Timing Parameters*	35
• Removed the description of "±3°C" in table note that starts "The device descriptor structure ..." of Table 5-22, *ADC, 10-Bit Linearity Parameters*	36
• Corrected bitfield from IRDSEL to IRDSSEL in Section 6.10.8, *Timers (Timer0_A3, Timer1_A3, Timer2_A2 and Timer3_A2)*, in the description that starts "The interconnection of Timer0_A3 and ..."	51
• Corrected the ADCINCHx column heading in Table 6-15, *ADC Channel Connections*	53
• Corrected the ADCSHSx column heading in Table 6-16, *ADC Trigger Signal Connections*	53
• Added P1SELC information in Table 6-32, *Port P1, P2 Registers (Base Address: 0200h)*	64
• Added P2SELC information in Table 6-32, *Port P1, P2 Registers (Base Address: 0200h)*	64
• Added P3SELC information in Table 6-33, *Port P3 Registers (Base Address: 0220h)*	64

Changes from revision C to revision D

Changes from August 29, 2018 to September 10, 2018	Page
• Removed SYNC signal (not supported) from Figure 4-1, *32-Pin RHB Package (Top View)*	8
• Combined two YQW pinout figures into one, and removed SYNC signal (not supported) in Figure 4-2, *24-Pin YQW Package (Top and Bottom Views)*	9
• Added the $t_{TA,cap}$ parameter in Table 5-13, *Timer_A*	29
• Removed SYNC signal (not supported) from figure and table in Section 6.11.2, *Port P2 (P2.0 to P2.2) Input/Output With Schmitt Trigger*	56

Changes from revision B to revision C

Changes from June 20, 2017 to August 28, 2018	Page
• Updated Section 3.1, *Related Products*	7

- Corrected description of pin C5 on YQW package (changed from DVSS to NC) in Table 4-1, *Pin Attributes* 11
- Corrected typos in the pin numbers of P2.3,5,6 in the RGE package in Table 4-2 13
- Corrected typos in the pin numbers of UCA1RXD and UCA1TXD in the RGE package in Table 4-2 14
- Changed description of NC pins from "No internal connection" to "No connection" in Table 4-2, *Signal Descriptions* 14
- Corrected package type in VQFN row (changed from QFN to VQFN) in Table 4-2, *Signal Descriptions* 14
- Changed HBM limit to ±1000 V and CDM limit to ±250 V in Section 5.2, *ESD Ratings* 16
- Added note to V_{SVSH-} and V_{SVSH+} parameters in Table 5-2, *PMM, SVS and BOR* 21
- Added the $t_{TA,cap}$ parameter in Table 5-13, *Timer_A* 29
- Moved "FRAM access time error" to "System Reset" row and added ACCTEIFG to interrupt flag column in Table 6-2, *Interrupt Sources, Flags, and Vectors* 41
- Corrected the offset for P2SEL1 in Table 6-32, *Port P1, P2 Registers (Base Address: 0200h)* 64
- Updated text and figure in Section 8.2, *Device Nomenclature* 75

Changes from revision A to revision B

Changes from June 9, 2017 to June 19, 2017	Page
• Corrected FRAM and RAM sizes in Figure 1-1, *Functional Block Diagram*	3
• Added the $t_{TA,cap}$ parameter in Table 5-13, *Timer_A*	29

Changes from initial release to revision A

Changes from October 21, 2015 to June 8, 2017	Page
• Added note to list item that starts "Wide Supply Voltage Range..."	1
• Added DSBGA (YQW) package to "Package Options" list in Section 1.1, *Features*	1
• Added DSBGA (YQW) package option to *Device Information* table in Section 1.3, *Description*	2
• Added row for MSP430FR2433IYQW to Table 3-1, *Device Comparison*	7
• Added Section 3.1, *Related Products*	7
• Added DSBGA (YQW) package to Table 4-1, *Pin Attributes*	10
• Added DSBGA (YQW) package to Table 4-2, *Signal Descriptions*	12
• Added row for VQFN thermal pad	14
• Removed FRAM reflow note	16
• In the note that starts "Low-power mode 3, VLO, excludes SVS test conditions...", changed "f_{XT1} = 0 Hz" to "f_{XT1} = 32768 Hz"	18
• Added DSBGA (YQW) package and changed notes for Section 5.10, *Thermal Resistance Characteristics*	20
• Added note that starts "The VLO clock frequency is reduced by 15%..."	26
• Added the $t_{TA,cap}$ parameter in Table 5-13, *Timer_A*	29
• Removed ADCDIV from the formula for the TYP value in the second row of the $t_{CONVERT}$ parameter in Table 5-21, *ADC, 10-Bit Timing Parameters* (removed because ADCCLK is after division)	35
• Added note to "Clock" in Table 6-1, *Operating Modes*	40
• Added note that starts "XT1CLK and VLOCLK can be active during LPM4..."	41
• Add description of blank device detection	43
• Corrected description in Section 6.10.10, *Backup Memory (BKMEM)*	52
• Changed the paragraph that starts "Quickly switching digital signals and ..." in Section 7.2.1.2, *Design Requirements*	73
• Updated Figure 8-1, *Device Nomenclature*	75
• Replaced former section *Development Tools Support* with Section 8.3, *Tools and Software*	76
• Updated format and content of Section 8.4, *Documentation Support*	78

Copyright © 2015–2019, Texas Instruments Incorporated

3 Device Comparison

Table 3-1 summarizes the features of the available family members.

Table 3-1. Device Comparison(1)(2)

DEVICE	PROGRAM FRAM + INFORMATION FRAM (bytes)	SRAM (bytes)	TA0 TO TA3	eUSCI_A		eUSCI_B	10-BIT ADC CHANNELS	GPIOs	PACKAGE
				UART	SPI				
MSP430FR2433IRGE	15360 + 512	4096	2, 3 × CCR(3) 2, 2 × CCR	up to 2	up to 2	1	8	19	24 RGE (VQFN)
MSP430FR2433IYQW	15360 + 512	4096	2, 3 × CCR(3) 2, 2 × CCR	up to 2	1	1	8	17	24 YQW (DSBGA)

(1) For the most current package and ordering information, see the *Package Option Addendum* in Section 9, or see the TI website at www.ti.com.
(2) Package drawings, standard packing quantities, thermal data, symbolization, and PCB design guidelines are available at www.ti.com/packaging.
(3) A CCR register is a configurable register that provides internal and external capture or compare inputs, or internal and external PWM outputs.

3.1 Related Products

For information about other devices in this family of products or related products, see the following links.

TI 16-bit and 32-bit microcontrollers

High-performance, low-power solutions to enable the autonomous future

Products for MSP430 ultra-low-power sensing & measurement MCUs

One platform. One ecosystem. Endless possibilities.

Companion products for MSP430FR2433

Review products that are frequently purchased or used with this product.

Reference designs for MSP430FR2433

Find reference designs leveraging the best in TI technology – from analog and power management to embedded processors

Copyright © 2015–2019, Texas Instruments Incorporated

4 Terminal Configuration and Functions

4.1 Pin Diagram

Figure 4-1 shows the pinout of the 24-pin RGE package.

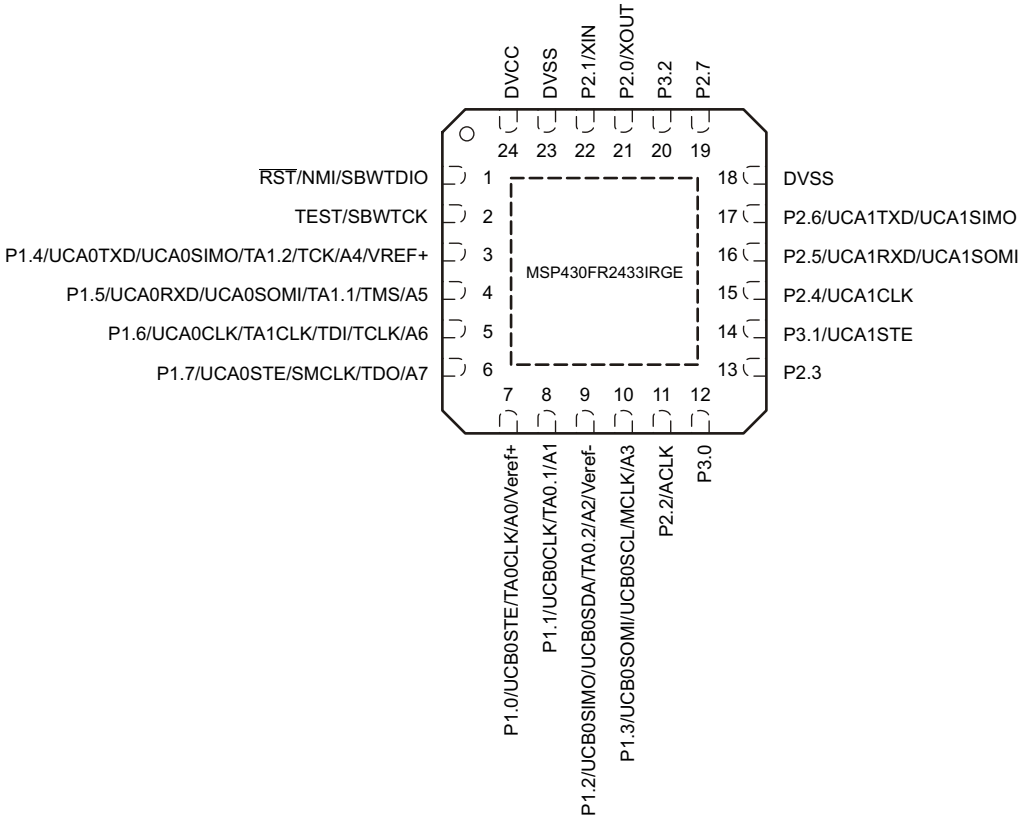

Figure 4-1. 24-Pin RGE Package (Top View)

Copyright © 2015–2019, Texas Instruments Incorporated

Figure 4-2 shows the pinout of the 24-pin YQW package.

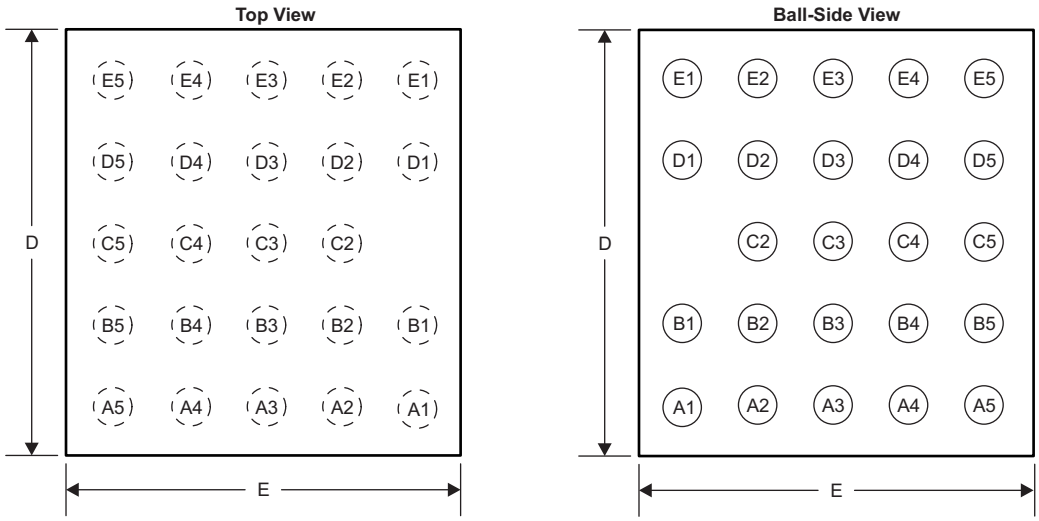

PIN NO.	SIGNAL NAME	PIN NO.	SIGNAL NAME
A1	P1.1/UCB0CLK/TA0.1/A1	C4	NC
A2	P1.3/UCB0SOMI/UCB0SCL/MCLK/A3	C5	NC
A3	P2.2/ACLK	D1	P1.4/UCA0TXD/UCA0SIMO/TA1.2/TCK/A4/VREF+
A4	P3.0	D2	TEST/SBWTCK
A5	P2.3	D3	DVSS
B1	P1.0/UCB0STE/TA0CLK/A0/Veref+	D4	P3.2
B2	P1.2/UCB0SIMO/UCB0SDA/TA0.2/A2/Veref-	D5	NC
B3	P1.7/UCA0STE/SMCLK/TDO/A7	E1	$\overline{\text{RST}}$/NMI/SBWTDIO
B4	P2.5/UCA1RXD	E2	DVCC
B5	P2.6/UCA1TXD	E3	P2.1/XIN
C2	P1.5/UCA0RXD/UCA0SOMI/TA1.1/TMS/A5	E4	P2.0/XOUT
C3	P1.6/UCA0CLK/TA1CLK/TDI/TCLK/A6	E5	P2.7

Figure 4-2. 24-Pin YQW Package (Top and Bottom Views)

4.2 Pin Attributes

Table 4-1 lists the attributes of all pins.

Table 4-1. Pin Attributes

PIN NUMBER		SIGNAL NAME (1) (2)	SIGNAL TYPE (3)	BUFFER TYPE (4)	POWER SOURCE (5)	RESET STATE AFTER BOR (6)
RGE	YQW					
1	E1	$\overline{\text{RST}}$ (RD)	I	LVCMOS	DVCC	OFF
		NMI	I	LVCMOS	DVCC	–
		SBWTDIO	I/O	LVCMOS	DVCC	–
2	D2	TEST (RD)	I	LVCMOS	DVCC	OFF
		SBWTCK	I	LVCMOS	DVCC	–
3	D1	P1.4 (RD)	I/O	LVCMOS	DVCC	OFF
		UCA0TXD	O	LVCMOS	DVCC	–
		UCA0SIMO	I/O	LVCMOS	DVCC	–
		TA1.2	I/O	LVCMOS	DVCC	–
		TCK	I	LVCMOS	DVCC	–
		A4	I	Analog	DVCC	–
		VREF+	O	Power	DVCC	–
4	C2	P1.5 (RD)	I/O	LVCMOS	DVCC	OFF
		UCA0RXD	I	LVCMOS	DVCC	–
		UCA0SOMI	I/O	LVCMOS	DVCC	–
		TA1.1	I/O	LVCMOS	DVCC	–
		TMS	I	LVCMOS	DVCC	–
		A5	I	Analog	DVCC	–
5	C3	P1.6 (RD)	I/O	LVCMOS	DVCC	OFF
		UCA0CLK	I/O	LVCMOS	DVCC	–
		TA1CLK	I	LVCMOS	DVCC	–
		TDI	I	LVCMOS	DVCC	–
		TCLK	I	LVCMOS	DVCC	–
		A6	I	Analog	DVCC	–
6	B3	P1.7 (RD)	I/O	LVCMOS	DVCC	OFF
		UCA0STE	I/O	LVCMOS	DVCC	–
		SMCLK	O	LVCMOS	DVCC	–
		TDO	O	LVCMOS	DVCC	–
		A7	I	Analog	DVCC	–
7	B1	P1.0 (RD)	I/O	LVCMOS	DVCC	OFF
		UCB0STE	I/O	LVCMOS	DVCC	–
		TA0CLK	I	LVCMOS	DVCC	–
		A0	I	Analog	DVCC	–
		Veref+	I	Power	DVCC	–

(1) Signals names with (RD) denote the reset default pin name.
(2) To determine the pin mux encodings for each pin, see Section 6.11, *Input/Output Diagrams*.
(3) Signal Types: I = Input, O = Output, I/O = Input or Output
(4) Buffer Types: LVCMOS, Analog, or Power (see Table 4-3)
(5) The power source shown in this table is the I/O power source, which may differ from the module power source.
(6) Reset States:
OFF = High-impedance with Schmitt trigger and pullup or pulldown (if available) disabled
N/A = Not applicable

Copyright © 2015–2019, Texas Instruments Incorporated

Table 4-1. Pin Attributes (continued)

PIN NUMBER		SIGNAL NAME (1) (2)	SIGNAL TYPE (3)	BUFFER TYPE (4)	POWER SOURCE (5)	RESET STATE AFTER BOR (6)
RGE	YQW					
8	A1	P1.1 (RD)	I/O	LVCMOS	DVCC	OFF
		UCB0CLK	I/O	LVCMOS	DVCC	–
		TA0.1	I/O	LVCMOS	DVCC	–
		A1	I	Analog	DVCC	–
9	B2	P1.2 (RD)	I/O	LVCMOS	DVCC	OFF
		UCB0SIMO	I/O	LVCMOS	DVCC	–
		UCB0SDA	I/O	LVCMOS	DVCC	–
		TA0.2	I/O	LVCMOS	DVCC	–
		A2	I	Analog	DVCC	–
		Veref-	I	Power	DVCC	–
10	A2	P1.3 (RD)	I/O	LVCMOS	DVCC	OFF
		UCB0SOMI	I/O	LVCMOS	DVCC	–
		UCB0SCL	I/O	LVCMOS	DVCC	–
		MCLK	O	LVCMOS	DVCC	–
		A3	I	Analog	DVCC	–
11	A3	P2.2 (RD)	I/O	LVCMOS	DVCC	OFF
		ACLK	I/O	LVCMOS	DVCC	–
12	A4	P3.0	I/O	LVCMOS	DVCC	OFF
13	A5	P2.3	I/O	LVCMOS	DVCC	OFF
14	–	P3.1 (RD)	I/O	LVCMOS	DVCC	OFF
		UCA1STE	I/O	LVCMOS	DVCC	–
15	–	P2.4 (RD)	I/O	LVCMOS	DVCC	OFF
		UCA1CLK	I/O	LVCMOS	DVCC	–
16	B4	P2.5 (RD)	I/O	LVCMOS	DVCC	OFF
		UCA1RXD	I	LVCMOS	DVCC	–
		UCA1SOMI	I/O	LVCMOS	DVCC	–
17	B5	P2.6 (RD)	I/O	LVCMOS	DVCC	OFF
		UCA1TXD	O	LVCMOS	DVCC	–
		UCA1SIMO	I/O	LVCMOS	DVCC	–
18	–	DVSS	P	Power	DVCC	N/A
–	C5	NC	–	–	–	–
19	E5	P2.7	I/O	LVCMOS	DVCC	OFF
20	D4	P3.2	I/O	LVCMOS	DVCC	OFF
21	E4	P2.0 (RD)	I/O	LVCMOS	DVCC	OFF
		XOUT	O	LVCMOS	DVCC	–
22	E3	P2.1 (RD)	I/O	LVCMOS	DVCC	OFF
		XIN	I	LVCMOS	DVCC	–
23	D3	DVSS	P	Power	DVCC	N/A
24	E2	DVCC	P	Power	DVCC	N/A

4.3 Signal Descriptions

Table 4-2 describes the device signals.

Table 4-2. Signal Descriptions

FUNCTION	SIGNAL NAME	PIN NUMBER		PIN TYPE(1)	DESCRIPTION
		RGE	YQW		
ADC	A0	7	B1	I	Analog input A0
	A1	8	A1	I	Analog input A1
	A2	9	B2	I	Analog input A2
	A3	10	A2	I	Analog input A3
	A4	3	D1	I	Analog input A4
	A5	4	C2	I	Analog input A5
	A6	5	C3	I	Analog input A6
	A7	6	B3	I	Analog input A7
	Veref+	7	B1	I	ADC positive reference
	Veref-	9	B2	I	ADC negative reference
Clock	ACLK	11	A3	O	ACLK output
	MCLK	10	A2	O	MCLK output
	SMCLK	6	B3	O	SMCLK output
	XIN	22	E3	I	Input terminal for crystal oscillator
	XOUT	21	E4	O	Output terminal for crystal oscillator
Debug	SBWTCK	2	D2	I	Spy-Bi-Wire input clock
	SBWTDIO	1	E1	I/O	Spy-Bi-Wire data input/output
	TCK	3	D1	I	Test clock
	TCLK	5	C3	I	Test clock input
	TDI	5	C3	I	Test data input
	TDO	6	B3	O	Test data output
	TEST	2	D2	I	Test Mode pin – selected digital I/O on JTAG pins
	TMS	4	C2	I	Test mode select

(1) Pin Types: I = Input, O = Output, I/O = Input or Output, P = Power

Copyright © 2015–2019, Texas Instruments Incorporated

Table 4-2. Signal Descriptions (continued)

FUNCTION	SIGNAL NAME	PIN NUMBER		PIN TYPE(1)	DESCRIPTION
		RGE	YQW		
GPIO	P1.0	7	B1	I/O	General-purpose I/O
	P1.1	8	A1	I/O	General-purpose I/O
	P1.2	9	B2	I/O	General-purpose I/O
	P1.3	10	A2	I/O	General-purpose I/O
	P1.4	3	D1	I/O	General-purpose I/O(2)
	P1.5	4	C2	I/O	General-purpose I/O(2)
	P1.6	5	C3	I/O	General-purpose I/O(2)
	P1.7	6	B3	I/O	General-purpose I/O(2)
	P2.0	21	E4	I/O	General-purpose I/O
	P2.1	22	E3	I/O	General-purpose I/O
	P2.2	11	A3	I/O	General-purpose I/O
	P2.3	13	A5	I/O	General-purpose I/O
	P2.4	15	–	I/O	General-purpose I/O
	P2.5	16	B4	I/O	General-purpose I/O
	P2.6	17	B5	I/O	General-purpose I/O
	P2.7	19	E5	I/O	General-purpose I/O
	P3.0	12	A4	I/O	General-purpose I/O
	P3.1	14	–	I/O	General-purpose I/O
	P3.2	20	D4	I/O	General-purpose I/O
I^2C	UCB0SCL	10	A2	I/O	eUSCI_B0 I^2C clock
	UCB0SDA	9	B2	I/O	eUSCI_B0 I^2C data
Power	DVCC	24	E2	P	Power supply
	DVSS	23	D3	P	Power ground
	VREF+	3	D1	P	Output of positive reference voltage with ground as reference
SPI	UCA0CLK	5	C3	I/O	eUSCI_A0 SPI clock input/output
	UCA0SIMO	3	D1	I/O	eUSCI_A0 SPI slave in/master out
	UCA0SOMI	4	C2	I/O	eUSCI_A0 SPI slave out/master in
	UCA0STE	6	B3	I/O	eUSCI_A0 SPI slave transmit enable
	UCA1CLK	15	–	I/O	eUSCI_A1 SPI clock input/output
	UCA1SIMO	17	B5	I/O	eUSCI_A1 SPI slave in/master out
	UCA1SOMI	16	B4	I/O	eUSCI_A1 SPI slave out/master in
	UCA1STE	14	–	I/O	eUSCI_A1 SPI slave transmit enable
	UCB0CLK	8	A1	I/O	eUSCI_B0 clock input/output
	UCB0SIMO	9	B2	I/O	eUSCI_B0 SPI slave in/master out
	UCB0SOMI	10	A2	I/O	eUSCI_B0 SPI slave out/master in
	UCB0STE	7	B1	I/O	eUSCI_B0 slave transmit enable
System	NMI	1	E1	I	Nonmaskable interrupt input
	$\overline{RST}$	1	E1	I	Active-low reset input

(2) Because this pin is multiplexed with the JTAG function, TI recommends disabling the pin interrupt function while in JTAG debug to prevent collisions.

Copyright © 2015–2019, Texas Instruments Incorporated

Table 4-2. Signal Descriptions (continued)

FUNCTION	SIGNAL NAME	PIN NUMBER		PIN TYPE(1)	DESCRIPTION
		RGE	YQW		
Timer_A	TA0.1	8	A1	I/O	Timer TA0 CCR1 capture: CCI1A input, compare: Out1 outputs
	TA0.2	9	B2	I/O	Timer TA0 CCR2 capture: CCI2A input, compare: Out2 outputs
	TA0CLK	7	B1	I	Timer clock input TACLK for TA0
	TA1.1	4	C2	I/O	Timer TA1 CCR1 capture: CCI1A input, compare: Out1 outputs
	TA1.2	3	D1	I/O	Timer TA1 CCR2 capture: CCI2A input, compare: Out2 outputs
	TA1CLK	5	C3	I	Timer clock input TACLK for TA1
UART	UCA0RXD	4	C2	I	eUSCI_A0 UART receive data
	UCA0TXD	3	D1	O	eUSCI_A0 UART transmit data
	UCA1RXD	16	B4	I	eUSCI_A1 UART receive data
	UCA1TXD	17	B5	O	eUSCI_A1 UART transmit data
No connection	NC		C4, C5, D5	I/O	No connection
VQFN Pad	VQFN thermal pad	Pad	N/A		VQFN package exposed thermal pad. Connection to V_{SS} is recommended

Copyright © 2015–2019, Texas Instruments Incorporated

4.4 Pin Multiplexing

Pin multiplexing for these MCUs is controlled by both register settings and operating modes (for example, if the MCU is in test mode). For details of the settings for each pin and schematics of the multiplexed ports, see Section 6.11.

4.5 Buffer Types

Table 4-3 defines the pin buffer types that are listed in Table 4-1.

Table 4-3. Buffer Types

BUFFER TYPE (STANDARD)	NOMINAL VOLTAGE	HYSTERESIS	PU OR PD	NOMINAL PU OR PD STRENGTH (µA)	OUTPUT DRIVE STRENGTH (mA)	OTHER CHARACTERISTICS
LVCMOS	3.0 V	Y (1)	Programmable	See Section 5.11.4	See Section 5.11.4	
Analog	3.0 V	N	N/A	N/A	N/A	See analog modules in Section 5 for details.
Power (DVCC)	3.0 V	N	N/A	N/A	N/A	SVS enables hysteresis on DVCC.
Power (AVCC)	3.0 V	N	N/A	N/A	N/A	

(1) Only for input pins.

4.6 Connection of Unused Pins

Table 4-4 lists the correct termination of unused pins.

Table 4-4. Connection of Unused Pins (1)

PIN	POTENTIAL	COMMENT
Px.0 to Px.7	Open	Switched to port function, output direction (PxDIR.n = 1)
$\overline{\text{RST}}$/NMI	DV_{CC}	47-kΩ pullup or internal pullup selected with 10-nF (or 1.1-nF) pulldown (2)
TEST	Open	This pin always has an internal pulldown enabled.

(1) Any unused pin with a secondary function that is shared with general-purpose I/O should follow the Px.0 to Px.7 unused pin connection guidelines.
(2) The pulldown capacitor should not exceed 1.1 nF when using MCUs with Spy-Bi-Wire interface in Spy-Bi-Wire mode with TI tools like FET interfaces or GANG programmers.

5 Specifications

5.1 Absolute Maximum Ratings[1]

over operating free-air temperature range (unless otherwise noted)

	MIN	MAX	UNIT
Voltage applied at DVCC pin to V_{SS}	–0.3	4.1	V
Voltage applied to any other pin[2]	–0.3	V_{CC} + 0.3 (4.1 V Max)	V
Diode current at any device pin		±2	mA
Maximum junction temperature, T_J		85	°C
Storage temperature, T_{stg}[3]	–40	125	°C

(1) Stresses beyond those listed under *Absolute Maximum Ratings* may cause permanent damage to the device. These are stress ratings only, and functional operation of the device at these or any other conditions beyond those indicated under *Recommended Operating Conditions* is not implied. Exposure to absolute-maximum-rated conditions for extended periods may affect device reliability.
(2) All voltages referenced to V_{SS}.
(3) Higher temperature may be applied during board soldering according to the current JEDEC J-STD-020 specification with peak reflow temperatures not higher than classified on the device label on the shipping boxes or reels.

5.2 ESD Ratings

			VALUE	UNIT
$V_{(ESD)}$	Electrostatic discharge	Human-body model (HBM), per ANSI/ESDA/JEDEC JS-001[1]	±1000	V
		Charged-device model (CDM), per JEDEC specification JESD22-C101[2]	±250	

(1) JEDEC document JEP155 states that 500-V HBM allows safe manufacturing with a standard ESD control process. Pins listed as ±1000 V may actually have higher performance.
(2) JEDEC document JEP157 states that 250-V CDM allows safe manufacturing with a standard ESD control process. Pins listed as ±250 V may actually have higher performance.

5.3 Recommended Operating Conditions

			MIN	NOM	MAX	UNIT
V_{CC}	Supply voltage applied at DVCC pin[1][2][3][4]		1.8		3.6	V
V_{SS}	Supply voltage applied at DVSS pin			0		V
T_A	Operating free-air temperature		–40		85	°C
T_J	Operating junction temperature		–40		85	°C
C_{DVCC}	Recommended capacitor at DVCC[5]		4.7	10		µF
f_{SYSTEM}	Processor frequency (maximum MCLK frequency)[6]	No FRAM wait states (NWAITSx = 0)	0		8	MHz
		With FRAM wait states (NWAITSx = 1)[7]	0		16[8]	
f_{ACLK}	Maximum ACLK frequency				40	kHz
f_{SMCLK}	Maximum SMCLK frequency				16[8]	MHz

(1) Supply voltage changes faster than 0.2 V/µs can trigger a BOR reset even within the recommended supply voltage range. Following the data sheet recommendation for capacitor C_{DVCC} limits the slopes accordingly.
(2) Modules may have a different supply voltage range specification. See the specification of the respective module in this data sheet.
(3) TI recommends that power to the DVCC pin must not exceed the limits specified in *Recommended Operating Conditions*. Exceeding the specified limits can cause malfunction of the device including erroneous writes to RAM and FRAM.
(4) The minimum supply voltage is defined by the SVS levels. See the SVS threshold parameters in Table 5-2.
(5) A capacitor tolerance of ±20% or better is required. A low-ESR ceramic capacitor of 100 nF (minimum) should be placed as close as possible (within a few millimeters) to the respective pin pair.
(6) Modules may have a different maximum input clock specification. See the specification of the respective module in this data sheet.
(7) Wait states only occur on actual FRAM accesses (that is, on FRAM cache misses). RAM and peripheral accesses are always executed without wait states.
(8) If clock sources such as HF crystals or the DCO with frequencies >16 MHz are used, the clock must be divided in the clock system to comply with this operating condition.

Copyright © 2015–2019, Texas Instruments Incorporated

5.4 Active Mode Supply Current Into V_{CC} Excluding External Current(1)

V_{CC} = 3 V, T_A = 25°C (unless otherwise noted)

PARAMETER	EXECUTION MEMORY	TEST CONDITION	FREQUENCY ($f_{MCLK} = f_{SMCLK}$)						UNIT
			1 MHz 0 WAIT STATES (NWAITSx = 0)		8 MHz 0 WAIT STATES (NWAITSx = 0)		16 MHz 1 WAIT STATE (NWAITSx = 1)		
			TYP	MAX	TYP	MAX	TYP	MAX	
$I_{AM,\ FRAM}$(0%)	FRAM 0% cache hit ratio	3 V, 25°C	504		2772		3047	3480	µA
		3 V, 85°C	516		2491		2871		
$I_{AM,\ FRAM}$(100%)	FRAM 100% cache hit ratio	3 V, 25°C	203		625		1000	1215	µA
		3 V, 85°C	212		639		1016		
$I_{AM,\ RAM}$(2)	RAM	3 V, 25°C	229		818		1377		µA

(1) All inputs are tied to 0 V or to V_{CC}. Outputs do not source or sink any current. Characterized with program executing typical data processing.
f_{ACLK} = 32768 Hz, $f_{MCLK} = f_{SMCLK} = f_{DCO}$ at specified frequency
Program and data entirely reside in FRAM. All execution is from FRAM.
(2) Program and data reside entirely in RAM. All execution is from RAM. No access to FRAM.

5.5 Active Mode Supply Current Per MHz

V_{CC} = 3 V, T_A = 25°C (unless otherwise noted)

PARAMETER		TEST CONDITIONS	TYP	UNIT
$dI_{AM,FRAM}/df$	Active mode current consumption per MHz, execution from FRAM, no wait states	[I_{AM} (75% cache hit rate) at 8 MHz – I_{AM} (75% cache hit rate) at 1 MHz)] / 7 MHz	126	µA/MHz

5.6 Low-Power Mode LPM0 Supply Currents Into V_{CC} Excluding External Current

V_{CC} = 3 V, T_A = 25°C (unless otherwise noted)(1)(2)

PARAMETER	V_{CC}	FREQUENCY (f_{SMCLK})						UNIT
		1 MHz		8 MHz		16 MHz		
		TYP	MAX	TYP	MAX	TYP	MAX	
I_{LPM0}	2 V	156		328		420		µA
	3 V	166		342		433		

(1) All inputs are tied to 0 V or to V_{CC}. Outputs do not source or sink any current.
(2) Current for watchdog timer clocked by SMCLK included.
f_{ACLK} = 32768 Hz, f_{MCLK} = 0 MHz, f_{SMCLK} at specified frequency.

5.7 Low-Power Mode (LPM3 and LPM4) Supply Currents (Into V_{CC}) Excluding External Current

over recommended ranges of supply voltage and operating free-air temperature (unless otherwise noted) [1]

PARAMETER		V_{CC}	–40°C		25°C		85°C		UNIT
			TYP	MAX	TYP	MAX	TYP	MAX	
$I_{LPM3,XT1}$	Low-power mode 3, 12.5-pF crystal, includes SVS[2][3][4]	3 V	0.98		1.18	1.65	3.24		µA
		2 V	0.96		1.16		3.21		
$I_{LPM3,VLO}$	Low-power mode 3, VLO, excludes SVS[5]	3 V	0.78		0.98	1.40	3.04		µA
		2 V	0.76		0.96		3.01		
$I_{LPM3,\ RTC}$	Low-power mode 3, RTC, excludes SVS[6] (see Figure 5-1)	3 V	0.93		1.13		3.19		µA
$I_{LPM4,\ SVS}$	Low-power mode 4, includes SVS	3 V	0.51		0.65		2.65		µA
		2 V	0.49		0.64		2.63		
I_{LPM4}	Low-power mode 4, excludes SVS	3 V	0.35		0.49		2.49		µA
		2 V	0.34		0.48		2.46		

(1) All inputs are tied to 0 V or to V_{CC}. Outputs do not source or sink any current.
(2) Not applicable for MCUs with HF crystal oscillator only.
(3) Characterized with a Micro Crystal MS1V-T1K crystal with a load capacitance of 12.5 pF. The internal and external load capacitance are chosen to closely match the required 12.5-pF load.
(4) Low-power mode 3, 12.5-pF crystal, includes SVS test conditions:
Current for watchdog timer clocked by ACLK and RTC clocked by XT1 included. Current for brownout and SVS included (SVSHE = 1).
CPUOFF = 1, SCG0 = 1 SCG1 = 1, OSCOFF = 0 (LPM3),
f_{XT1} = 32768 Hz, $f_{ACLK} = f_{XT1}$, $f_{MCLK} = f_{SMCLK}$ = 0 MHz
(5) Low-power mode 3, VLO, excludes SVS test conditions:
Current for watchdog timer clocked by VLO included. RTC disabled. Current for brownout included. SVS disabled (SVSHE = 0).
CPUOFF = 1, SCG0 = 1 SCG1 = 1, OSCOFF = 0 (LPM3)
f_{XT1} = 32768 Hz, $f_{ACLK} = f_{MCLK} = f_{SMCLK}$ = 0 MHz
(6) RTC periodically wakes up every second with external 32768-Hz input as source.

5.8 Low-Power Mode LPMx.5 Supply Currents (Into V_{CC}) Excluding External Current

over recommended ranges of supply voltage and operating free-air temperature (unless otherwise noted)

PARAMETER		V_{CC}	–40°C		25°C		85°C		UNIT
			TYP	MAX	TYP	MAX	TYP	MAX	
$I_{LPM3.5,\ XT1}$	Low-power mode 3.5, 12.5-pF crystal, includes SVS[1][2][3] (see Figure 5-2)	3 V	0.65		0.73	0.95	0.99	1.42	µA
		2 V	0.63		0.71		0.87		
$I_{LPM4.5,\ SVS}$	Low-power mode 4.5, includes SVS[4] (see Figure 5-3)	3 V	0.22		0.24	0.31	0.30	0.38	µA
		2 V	0.21		0.23		0.28		
$I_{LPM4.5}$	Low-power mode 4.5, excludes SVS[5]	3 V	0.012		0.016	0.055	0.061	0.120	µA
		2 V	0.002		0.007		0.044		

(1) Not applicable for MCUs with HF crystal oscillator only.
(2) Characterized with a Micro Crystal MS1V-T1K crystal with a load capacitance of 12.5 pF. The internal and external load capacitance are chosen to closely match the required 12.5-pF load.
(3) Low-power mode 3.5, 12.5-pF crystal, includes SVS test conditions:
Current for RTC clocked by XT1 included. Current for brownout and SVS included (SVSHE = 1). Core regulator disabled.
PMMREGOFF = 1, CPUOFF = 1, SCG0 = 1 SCG1 = 1, OSCOFF = 1 (LPMx.5),
f_{XT1} = 32768 Hz, f_{ACLK} = 0, $f_{MCLK} = f_{SMCLK}$ = 0 MHz
(4) Low-power mode 4.5, includes SVS test conditions:
Current for brownout and SVS included (SVSHE = 1). Core regulator disabled.
PMMREGOFF = 1, CPUOFF = 1, SCG0 = 1 SCG1 = 1, OSCOFF = 1 (LPMx.5),
f_{XT1} = 0 Hz, $f_{ACLK} = f_{MCLK} = f_{SMCLK}$ = 0 MHz
(5) Low-power mode 4.5, excludes SVS test conditions:
Current for brownout included. SVS disabled (SVSHE = 0). Core regulator disabled.
PMMREGOFF = 1, CPUOFF = 1, SCG0 = 1 SCG1 = 1, OSCOFF = 1 (LPMx.5),
f_{XT1} = 0 Hz, $f_{ACLK} = f_{MCLK} = f_{SMCLK}$ = 0 MHz

Copyright © 2015–2019, Texas Instruments Incorporated

5.9 Typical Characteristics - Low-Power Mode Supply Currents

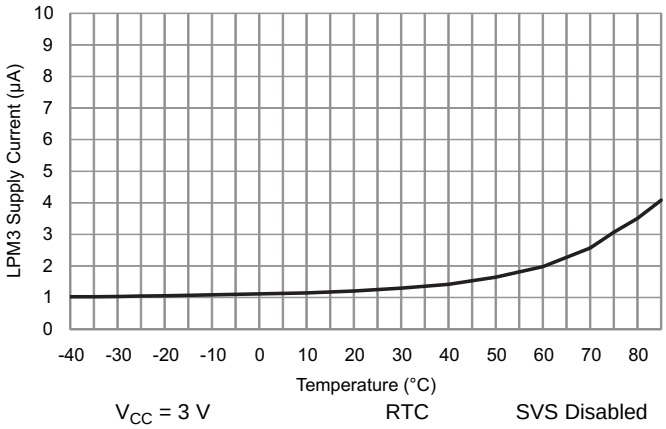

Figure 5-1. LPM3 Supply Current vs Temperature

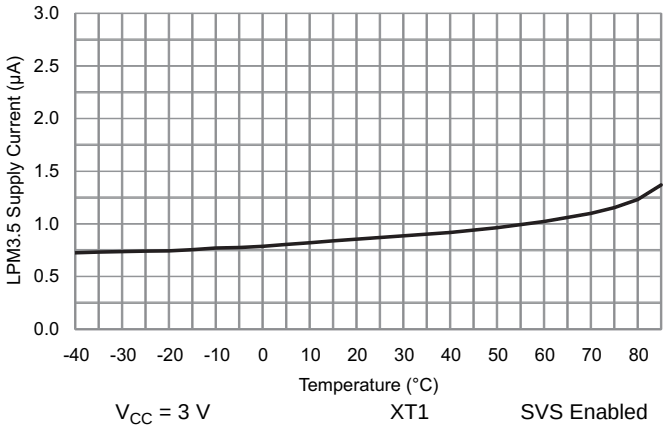

Figure 5-2. LPM3.5 Supply Current vs Temperature

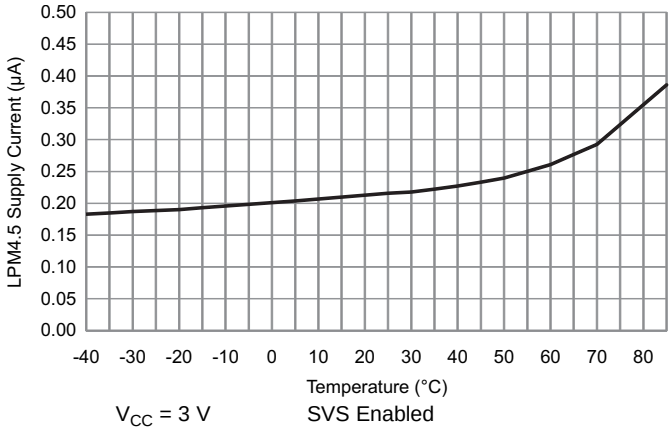

Figure 5-3. LPM4.5 Supply Current vs Temperature

Table 5-1. Typical Characteristics – Current Consumption Per Module

MODULE	TEST CONDITIONS	REFERENCE CLOCK	MIN	TYP	MAX	UNIT
Timer_A		Module input clock		5		µA/MHz
eUSCI_A	UART mode	Module input clock		7		µA/MHz
eUSCI_A	SPI mode	Module input clock		5		µA/MHz
eUSCI_B	SPI mode	Module input clock		5		µA/MHz
eUSCI_B	I^2C mode, 100 kbaud	Module input clock		5		µA/MHz
RTC		32 kHz		85		nA
CRC	From start to end of operation	MCLK		8.5		µA/MHz

Copyright © 2015–2019, Texas Instruments Incorporated

5.10 Thermal Resistance Characteristics

THERMAL METRIC[1]			VALUE[2]	UNIT
$R\theta_{JA}$	Junction-to-ambient thermal resistance, still air	VQFN 24 pin (RGE)	32.6	ºC/W
		DSBGA 24 pin (YQW)	63.7	
$R\theta_{JC}$	Junction-to-case (top) thermal resistance	VQFN 24 pin (RGE)	32.4	ºC/W
		DSBGA 24 pin (YQW)	0.3	
$R\theta_{JB}$	Junction-to-board thermal resistance	VQFN 24 pin (RGE)	10.1	ºC/W
		DSBGA 24 pin (YQW)	9.2	

(1) For more information about traditional and new thermal metrics, see *Semiconductor and IC Package Thermal Metrics*.
(2) These values are based on a JEDEC-defined 2S2P system (with the exception of the Theta JC ($R\theta_{JC}$) value, which is based on a JEDEC-defined 1S0P system) and will change based on environment and application. For more information, see these EIA/JEDEC standards:
- JESD51-2, *Integrated Circuits Thermal Test Method Environmental Conditions - Natural Convection (Still Air)*
- JESD51-3, *Low Effective Thermal Conductivity Test Board for Leaded Surface Mount Packages*
- JESD51-7, *High Effective Thermal Conductivity Test Board for Leaded Surface Mount Packages*
- JESD51-9, *Test Boards for Area Array Surface Mount Package Thermal Measurements*

Copyright © 2015–2019, Texas Instruments Incorporated

5.11 Timing and Switching Characteristics

5.11.1 Power Supply Sequencing

Table 5-2 lists the characteristics of the SVS and BOR.

Table 5-2. PMM, SVS and BOR

over recommended ranges of supply voltage and operating free-air temperature (unless otherwise noted) (see Figure 5-4)

PARAMETER		TEST CONDITIONS	MIN	TYP	MAX	UNIT
$V_{BOR, safe}$	Safe BOR power-down level(1)		0.1			V
$t_{BOR, safe}$	Safe BOR reset delay(2)		10			ms
$I_{SVSH,AM}$	SVS_H current consumption, active mode	V_{CC} = 3.6 V			1.5	µA
$I_{SVSH,LPM}$	SVS_H current consumption, low-power modes	V_{CC} = 3.6 V		240		nA
V_{SVSH-}	SVS_H power-down level(3)		1.71	1.80	1.86	V
V_{SVSH+}	SVS_H power-up level(3)		1.74	1.89	1.99	V
V_{SVSH_hys}	SVS_H hysteresis			80		mV
$t_{PD,SVSH, AM}$	SVS_H propagation delay, active mode				10	µs
$t_{PD,SVSH, LPM}$	SVS_H propagation delay, low-power modes				100	µs
$V_{REF, 1.2V}$	1.2-V REF voltage(4)		1.158	1.20	1.242	V

(1) A safe BOR can be correctly generated only if DVCC drops below this voltage before it rises.
(2) When an BOR occurs, a safe BOR can be correctly generated only if DVCC is kept low longer than this period before it reaches V_{SVSH+}.
(3) For additional information, see the Dynamic Voltage Scaling Power Solution for MSP430 Devices With Single-Channel LDO Reference Design.
(4) This is a characterized result with external 1-mA load to ground from –40°C to 85°C.

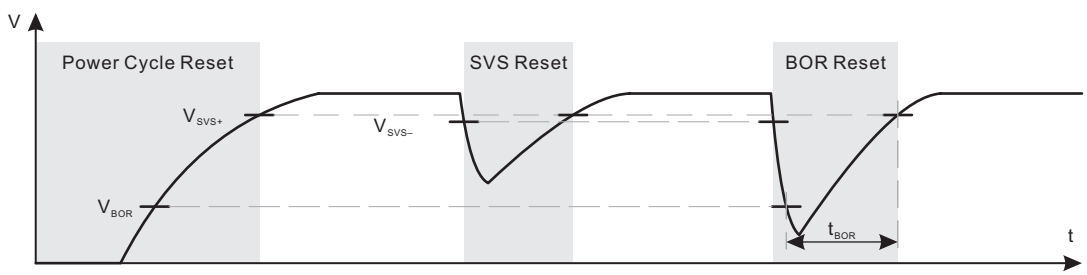

Figure 5-4. Power Cycle, SVS, and BOR Reset Conditions

5.11.2 Reset Timing

Table 5-3 lists the wake-up times.

Table 5-3. Wake-up Times From Low-Power Modes and Reset

over recommended ranges of supply voltage and operating free-air temperature (unless otherwise noted)

PARAMETER		TEST CONDITIONS	V_{CC}	MIN	TYP	MAX	UNIT
$t_{WAKE\text{-}UP\ FRAM}$	Additional wake-up time to activate the FRAM in AM if previously disabled by the FRAM controller or from a LPM if immediate activation is selected for wakeup (1)		3 V		10		µs
$t_{WAKE\text{-}UP\ LPM0}$	Wake-up time from LPM0 to active mode (1)		3 V			200 + 2.5 / f_{DCO}	ns
$t_{WAKE\text{-}UP\ LPM3}$	Wake-up time from LPM3 to active mode (2)		3 V		10		µs
$t_{WAKE\text{-}UP\ LPM4}$	Wake-up time from LPM4 to active mode		3 V		10		µs
$t_{WAKE\text{-}UP\ LPM3.5}$	Wake-up time from LPM3.5 to active mode (2)		3 V		350		µs
$t_{WAKE\text{-}UP\ LPM4.5}$	Wake-up time from LPM4.5 to active mode (2)	SVSHE = 1	3 V		350		µs
		SVSHE = 0			1		ms
$t_{WAKE\text{-}UP\text{-}RESET}$	Wake-up time from $\overline{RST}$ or BOR event to active mode (2)		3 V		1		ms
t_{RESET}	Pulse duration required at $\overline{RST}$/NMI pin to accept a reset		3 V	2			µs

(1) The wake-up time is measured from the edge of an external wake-up signal (for example, port interrupt or wake-up event) to the first externally observable MCLK clock edge.
(2) The wake-up time is measured from the edge of an external wake-up signal (for example, port interrupt or wake-up event) until the first instruction of the user program is executed.

Copyright © 2015–2019, Texas Instruments Incorporated

5.11.3 Clock Specifications

Table 5-4 lists the characteristics of XT1.

Table 5-4. XT1 Crystal Oscillator (Low Frequency)

over recommended ranges of supply voltage and operating free-air temperature (unless otherwise noted)[1]

PARAMETER		TEST CONDITIONS	V_{CC}	MIN	TYP	MAX	UNIT
$f_{XT1, LF}$	XT1 oscillator crystal, low frequency	LFXTBYPASS = 0			32768		Hz
$DC_{XT1, LF}$	XT1 oscillator LF duty cycle	Measured at MCLK, f_{LFXT} = 32768 Hz		30%		70%	
$f_{XT1,SW}$	XT1 oscillator logic-level square-wave input frequency	LFXTBYPASS = 1 [2][3]			32.768		kHz
$DC_{XT1, SW}$	LFXT oscillator logic-level square-wave input duty cycle	LFXTBYPASS = 1		40%		60%	
OA_{LFXT}	Oscillation allowance for LF crystals [4]	LFXTBYPASS = 0, LFXTDRIVE = {3}, f_{LFXT} = 32768 Hz, $C_{L,eff}$ = 12.5 pF			200		kΩ
$C_{L,eff}$	Integrated effective load capacitance[5]	See [6]			1		pF
$t_{START,LFXT}$	Start-up time [7]	f_{OSC} = 32768 Hz, LFXTBYPASS = 0, LFXTDRIVE = {3}, T_A = 25°C, $C_{L,eff}$ = 12.5 pF			1000		ms
$f_{Fault,LFXT}$	Oscillator fault frequency [8]	XTS = 0[9]		0		3500	Hz

(1) To improve EMI on the LFXT oscillator, observe the following guidelines:
- Keep the trace between the device and the crystal as short as possible.
- Design a good ground plane around the oscillator pins.
- Prevent crosstalk from other clock or data lines into oscillator pins XIN and XOUT.
- Avoid running PCB traces underneath or adjacent to the XIN and XOUT pins.
- Use assembly materials and processes that avoid any parasitic load on the oscillator XIN and XOUT pins.
- If conformal coating is used, make sure that it does not induce capacitive or resistive leakage between the oscillator pins.

(2) When LFXTBYPASS is set, LFXT circuits are automatically powered down. Input signal is a digital square wave with parametrics defined in the Schmitt-trigger inputs section of this data sheet. Duty cycle requirements are defined by $DC_{LFXT, SW}$.

(3) Maximum frequency of operation of the entire device cannot be exceeded.

(4) Oscillation allowance is based on a safety factor of 5 for recommended crystals. The oscillation allowance is a function of the LFXTDRIVE settings and the effective load. In general, comparable oscillator allowance can be achieved based on the following guidelines, but should be evaluated based on the actual crystal selected for the application:
- For LFXTDRIVE = {0}, $C_{L,eff}$ = 3.7 pF
- For LFXTDRIVE = {1}, 6 pF ≤ $C_{L,eff}$ ≤ 9 pF
- For LFXTDRIVE = {2}, 6 pF ≤ $C_{L,eff}$ ≤ 10 pF
- For LFXTDRIVE = {3}, 6 pF ≤ $C_{L,eff}$ ≤ 12 pF

(5) Includes parasitic bond and package capacitance (approximately 2 pF per pin).

(6) Requires external capacitors at both terminals to meet the effective load capacitance specified by crystal manufacturers. Recommended effective load capacitance values supported are 3.7 pF, 6 pF, 9 pF, and 12.5 pF. Maximum shunt capacitance of 1.6 pF. The PCB adds additional capacitance, so it must also be considered in the overall capacitance. Verify that the recommended effective load capacitance of the selected crystal is met.

(7) Includes start-up counter of 1024 clock cycles.

(8) Frequencies above the MAX specification do not set the fault flag. Frequencies between the MIN and MAX specifications might set the flag. A static condition or stuck at fault condition sets the flag.

(9) Measured with logic-level input frequency but also applies to operation with crystals.

Table 5-5 lists the characteristics of the FLL.

Table 5-5. DCO FLL, Frequency

over recommended operating free-air temperature (unless otherwise noted)

PARAMETER		TEST CONDITIONS	V_{CC}	MIN	TYP	MAX	UNIT
$f_{DCO, FLL}$	FLL lock frequency, 16 MHz, 25°C	Measured at MCLK, Internal trimmed REFO as reference	3 V	–1.0%		1.0%	
	FLL lock frequency, 16 MHz, –40°C to 85°C		3 V	–2.0%		2.0%	
	FLL lock frequency, 16 MHz, –40°C to 85°C	Measured at MCLK, XT1 crystal as reference	3 V	–0.5%		0.5%	

Table 5-5. DCO FLL, Frequency (continued)

over recommended operating free-air temperature (unless otherwise noted)

PARAMETER		TEST CONDITIONS	V_{CC}	MIN	TYP	MAX	UNIT
f_{DUTY}	Duty cycle	Measured at MCLK, XT1 crystal as reference	3 V	40%	50%	60%	
$Jitter_{cc}$	Cycle-to-cycle jitter, 16 MHz		3 V		0.25%		
$Jitter_{long}$	Long term jitter, 16 MHz		3 V		0.022%		
$t_{FLL, lock}$	FLL lock time		3 V		280		ms
$t_{start-up}$	DCO start-up time, 2 MHz	Measured at MCLK	3 V		16		µs

Table 5-6 lists the characteristics of the DCO.

Table 5-6. DCO Frequency

over recommended operating free-air temperature (unless otherwise noted) (also see Figure 5-5)

PARAMETER		TEST CONDITIONS	V_{CC}	TYP	UNIT
$f_{DCO, 16MHz}$	DCO frequency, 16 MHz	DCORSEL = 101b, DISMOD = 1b, DCOFTRIMEN = 1b, DCOFTRIM = 000b, DCO = 0	3 V	7.46	MHz
		DCORSEL = 101b, DISMOD = 1b, DCOFTRIMEN = 1b, DCOFTRIM = 000b, DCO = 511		12.26	
		DCORSEL = 101b, DISMOD = 1b, DCOFTRIMEN = 1b, DCOFTRIM = 111b, DCO = 0		17.93	
		DCORSEL = 101b, DISMOD = 1b, DCOFTRIMEN = 1b, DCOFTRIM = 111b, DCO = 511		29.1	
$f_{DCO, 12MHz}$	DCO frequency, 12 MHz	DCORSEL = 100b, DISMOD = 1b, DCOFTRIMEN = 1b, DCOFTRIM = 000b, DCO = 0	3 V	5.75	MHz
		DCORSEL = 100b, DISMOD = 1b, DCOFTRIMEN = 1b, DCOFTRIM = 000b, DCO = 511		9.5	
		DCORSEL = 100b, DISMOD = 1b, DCOFTRIMEN = 1b, DCOFTRIM = 111b, DCO = 0		13.85	
		DCORSEL = 100b, DISMOD = 1b, DCOFTRIMEN = 1b, DCOFTRIM = 111b, DCO = 511		22.5	
$f_{DCO, 8MHz}$	DCO frequency, 8 MHz	DCORSEL = 011b, DISMOD = 1b, DCOFTRIMEN = 1b, DCOFTRIM = 000b, DCO = 0	3 V	3.91	MHz
		DCORSEL = 011b, DISMOD = 1b, DCOFTRIMEN = 1b, DCOFTRIM = 000b, DCO = 511		6.49	
		DCORSEL = 011b, DISMOD = 1b, DCOFTRIMEN = 1b, DCOFTRIM = 111b, DCO = 0		9.5	
		DCORSEL = 011b, DISMOD = 1b, DCOFTRIMEN = 1b, DCOFTRIM = 111b, DCO = 511		15.6	
$f_{DCO, 4MHz}$	DCO frequency, 4 MHz	DCORSEL = 010b, DISMOD = 1b, DCOFTRIMEN = 1b, DCOFTRIM = 000b, DCO = 0	3 V	2.026	MHz
		DCORSEL = 010b, DISMOD = 1b, DCOFTRIMEN = 1b, DCOFTRIM = 000b, DCO = 511		3.407	
		DCORSEL = 010b, DISMOD = 1b, DCOFTRIMEN = 1b, DCOFTRIM = 111b, DCO = 0		4.95	
		DCORSEL = 010b, DISMOD = 1b, DCOFTRIMEN = 1b, DCOFTRIM = 111b, DCO = 511		8.26	
$f_{DCO, 2MHz}$	DCO frequency, 2 MHz	DCORSEL = 001b, DISMOD = 1b, DCOFTRIMEN = 1b, DCOFTRIM = 000b, DCO = 0	3 V	1.0225	MHz
		DCORSEL = 001b, DISMOD = 1b, DCOFTRIMEN = 1b, DCOFTRIM = 000b, DCO = 511		1.729	
		DCORSEL = 001b, DISMOD = 1b, DCOFTRIMEN = 1b, DCOFTRIM = 111b, DCO = 0		2.525	
		DCORSEL = 001b, DISMOD = 1b, DCOFTRIMEN = 1b, DCOFTRIM = 111b, DCO = 511		4.25	

Copyright © 2015–2019, Texas Instruments Incorporated

Table 5-6. DCO Frequency (continued)

over recommended operating free-air temperature (unless otherwise noted) (also see Figure 5-5)

PARAMETER		TEST CONDITIONS	V_{CC}	TYP	UNIT
$f_{DCO, 1MHz}$	DCO frequency, 1 MHz	DCORSEL = 000b, DISMOD = 1b, DCOFTRIMEN = 1b, DCOFTRIM = 000b, DCO = 0	3 V	0.5319	MHz
		DCORSEL = 000b, DISMOD = 1b, DCOFTRIMEN = 1b, DCOFTRIM = 000b, DCO = 511		0.9029	
		DCORSEL = 000b, DISMOD = 1b, DCOFTRIMEN = 1b, DCOFTRIM = 111b, DCO = 0		1.307	
		DCORSEL = 000b, DISMOD = 1b, DCOFTRIMEN = 1b, DCOFTRIM = 111b, DCO = 511		2.21	

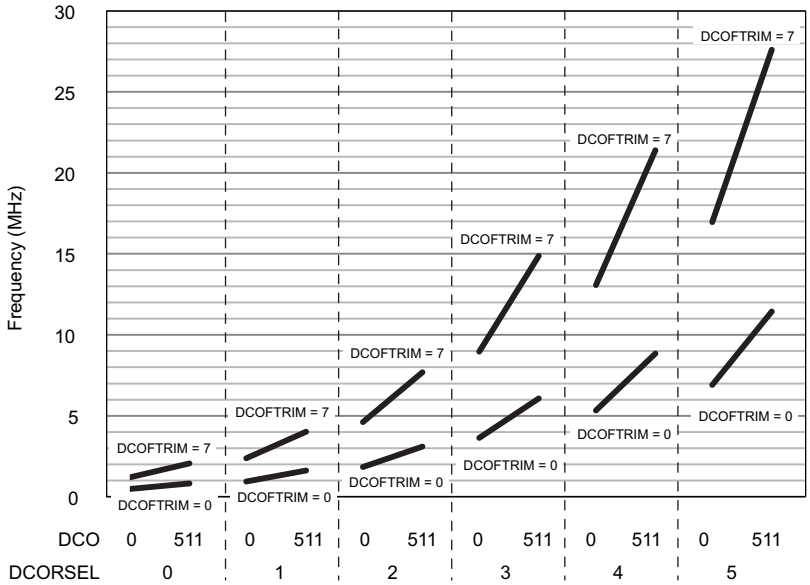

V_{CC} = 3 V T_A = –40°C to 85°C

Figure 5-5. Typical DCO Frequency

Table 5-7 lists the characteristics of the REFO.

Table 5-7. REFO

over recommended operating free-air temperature (unless otherwise noted)

PARAMETER		TEST CONDITIONS	V_{CC}	MIN	TYP	MAX	UNIT
I_{REFO}	REFO oscillator current consumption	T_A = 25°C	3 V		15		µA
f_{REFO}	REFO calibrated frequency	Measured at MCLK	3 V		32768		Hz
	REFO absolute calibrated tolerance	–40°C to 85°C	1.8 V to 3.6 V	–3.5%		+3.5%	
df_{REFO}/d_T	REFO frequency temperature drift	Measured at MCLK (1)	3 V		0.01		%/°C
df_{REFO}/d_{VCC}	REFO frequency supply voltage drift	Measured at MCLK at 25°C (2)	1.8 V to 3.6 V		1		%/V
f_{DC}	REFO duty cycle	Measured at MCLK	1.8 V to 3.6 V	40%	50%	60%	
t_{START}	REFO start-up time	40% to 60% duty cycle			50		µs

(1) Calculated using the box method: (MAX(–40°C to 85°C) – MIN(–40°C to 85°C)) / MIN(–40°C to 85°C) / (85°C – (–40°C))
(2) Calculated using the box method: (MAX(1.8 V to 3.6 V) – MIN(1.8 V to 3.6 V)) / MIN(1.8 V to 3.6 V) / (3.6 V – 1.8 V)

Table 5-8 lists the characteristics of the VLO.

NOTE

The VLO clock frequency is reduced by 15% (typical) when the device switches from active mode to LPM3 or LPM4, because the reference changes. This lower frequency is not a violation of the VLO specifications (see Table 5-8).

Table 5-8. Internal Very-Low-Power Low-Frequency Oscillator (VLO)

over recommended ranges of supply voltage and operating free-air temperature (unless otherwise noted)

PARAMETER		TEST CONDITIONS	V_{CC}	TYP	UNIT
f_{VLO}	VLO frequency	Measured at MCLK	3 V	10	kHz
df_{VLO}/d_T	VLO frequency temperature drift	Measured at MCLK (1)	3 V	0.5	%/°C
df_{VLO}/dV_{CC}	VLO frequency supply voltage drift	Measured at MCLK (2)	2 V to 3.6 V	4	%/V
$f_{VLO,DC}$	Duty cycle	Measured at MCLK	3 V	50%	

(1) Calculated using the box method: (MAX(–40°C to 85°C) – MIN(–40°C to 85°C)) / MIN(–40°C to 85°C) / (85°C – (–40°C))
(2) Calculated using the box method: (MAX(1.8 V to 3.6 V) – MIN(1.8 V to 3.6 V)) / MIN(1.8 V to 3.6 V) / (3.6 V – 1.8 V)

Table 5-9 lists the characteristics of the MODOSC.

Table 5-9. Module Oscillator (MODOSC)

over recommended ranges of supply voltage and operating free-air temperature (unless otherwise noted)

PARAMETER		V_{CC}	MIN	TYP	MAX	UNIT
f_{MODOSC}	MODOSC frequency	3 V	3.8	4.8	5.8	MHz
f_{MODOSC}/dT	MODOSC frequency temperature drift	3 V		0.102		%/°C
f_{MODOSC}/dV_{CC}	MODOSC frequency supply voltage drift	1.8 V to 3.6 V		1.02		%/V
$f_{MODOSC,DC}$	Duty cycle	3 V	40%	50%	60%	

Copyright © 2015–2019, Texas Instruments Incorporated

5.11.4 Digital I/Os

Table 5-10 lists the characteristics of the digital inputs.

Table 5-10. Digital Inputs

over recommended ranges of supply voltage and operating free-air temperature (unless otherwise noted)

PARAMETER		TEST CONDITIONS	V_{CC}	MIN	TYP	MAX	UNIT
V_{IT+}	Positive-going input threshold voltage		2 V	0.90		1.50	V
			3 V	1.35		2.25	
V_{IT-}	Negative-going input threshold voltage		2 V	0.50		1.10	V
			3 V	0.75		1.65	
V_{hys}	Input voltage hysteresis ($V_{IT+} – V_{IT-}$)		2 V	0.3		0.8	V
			3 V	0.4		1.2	
R_{Pull}	Pullup or pulldown resistor	For pullup: $V_{IN} = V_{SS}$ For pulldown: $V_{IN} = V_{CC}$		20	35	50	kΩ
$C_{I,dig}$	Input capacitance, digital only port pins	$V_{IN} = V_{SS}$ or V_{CC}			3		pF
$C_{I,ana}$	Input capacitance, port pins with shared analog functions	$V_{IN} = V_{SS}$ or V_{CC}			5		pF
$I_{lkg(Px.y)}$	High-impedance leakage current	See (1) (2)	2 V, 3 V	–20		20	nA
$t_{(int)}$	External interrupt timing (external trigger pulse duration to set interrupt flag)(3)	Ports with interrupt capability (see block diagram and terminal function descriptions)	2 V, 3 V	50			ns

(1) The leakage current is measured with V_{SS} or V_{CC} applied to the corresponding pins, unless otherwise noted.
(2) The leakage of the digital port pins is measured individually. The port pin is selected for input and the pullup or pulldown resistor is disabled.
(3) An external signal sets the interrupt flag every time the minimum interrupt pulse duration $t_{(int)}$ is met. It may be set by trigger signals shorter than $t_{(int)}$.

Table 5-11 lists the characteristics of the digital outputs.

Table 5-11. Digital Outputs

over recommended ranges of supply voltage and operating free-air temperature (unless otherwise noted) (also see Figure 5-6, Figure 5-7, Figure 5-8, and Figure 5-9)

PARAMETER		TEST CONDITIONS	V_{CC}	MIN	TYP	MAX	UNIT
V_{OH}	High-level output voltage	$I_{(OHmax)} = –3$ mA(1)	2 V	1.4		2.0	V
		$I_{(OHmax)} = –5$ mA(1)	3 V	2.4		3.0	
V_{OL}	Low-level output voltage	$I_{(OLmax)} = 3$ mA(1)	2 V	0.0		0.60	V
		$I_{(OHmax)} = 5$ mA(1)	3 V	0.0		0.60	
f_{Port_CLK}	Clock output frequency	$C_L = 20$ pF(2)	2 V	16			MHz
			3 V	16			
$t_{rise,dig}$	Port output rise time, digital only port pins	$C_L = 20$ pF	2 V		10		ns
			3 V		7		
$t_{fall,dig}$	Port output fall time, digital only port pins	$C_L = 20$ pF	2 V		10		ns
			3 V		5		

(1) The maximum total current, $I_{(OHmax)}$ and $I_{(OLmax)}$, for all outputs combined should not exceed ±48 mA to hold the maximum voltage drop specified.
(2) The port can output frequencies at least up to the specified limit and might support higher frequencies.

5.11.4.1 Typical Characteristics – Outputs at 3 V and 2 V

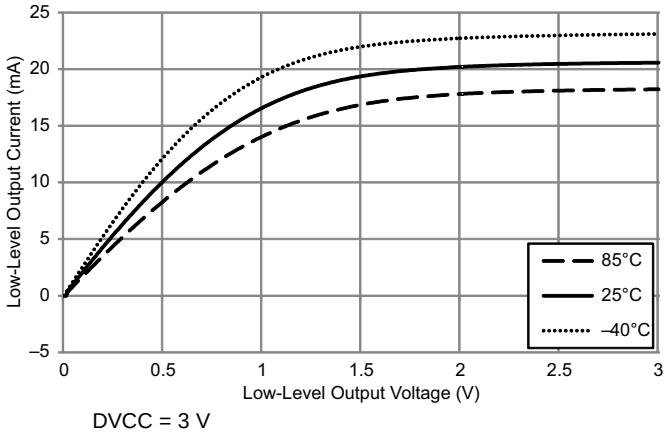

Figure 5-6. Typical Low-Level Output Current vs Low-Level Output Voltage

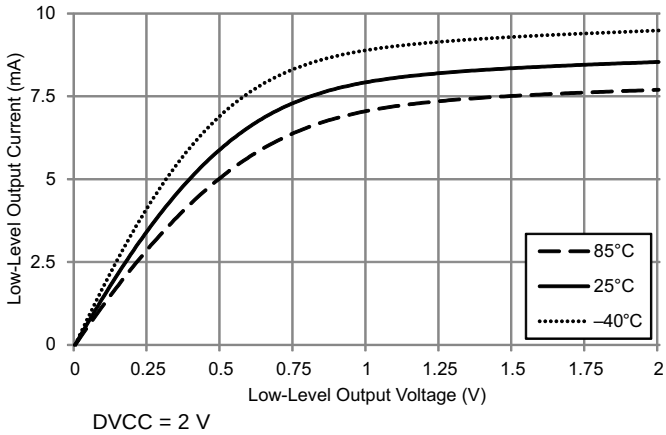

Figure 5-7. Typical Low-Level Output Current vs Low-Level Output Voltage

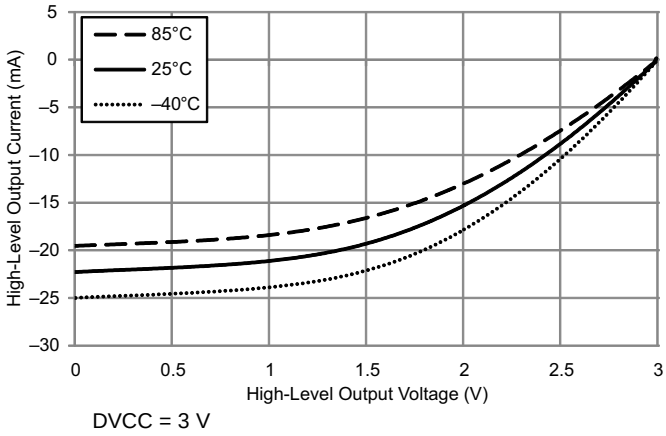

Figure 5-8. Typical High-Level Output Current vs High-Level Output Voltage

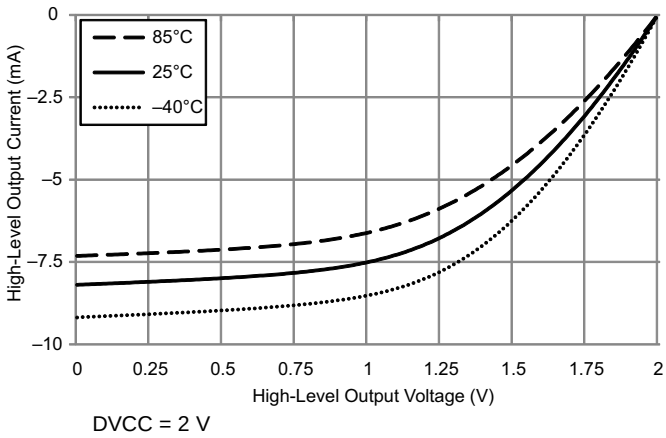

Figure 5-9. Typical High-Level Output Current vs High-Level Output Voltage

Copyright © 2015–2019, Texas Instruments Incorporated

5.11.5 VREF+ Built-in Reference

Table 5-12 lists the characteristics of VREF+.

Table 5-12. VREF+

over recommended ranges of supply voltage and operating free-air temperature (unless otherwise noted)

PARAMETER		TEST CONDITIONS	V_{CC}	MIN	TYP	MAX	UNIT
V_{REF+}	Positive built-in reference voltage	EXTREFEN = 1 with 1-mA load current	2 V, 3 V	1.15	1.19	1.23	V
TC_{REF+}	Temperature coefficient of built-in reference voltage				30		µV/°C

5.11.6 Timer_A

Table 5-13 lists the characteristics of Timer_A.

Table 5-13. Timer_A

over recommended ranges of supply voltage and operating free-air temperature (unless otherwise noted) (see Figure 5-10 and Figure 5-11)

PARAMETER		TEST CONDITIONS	V_{CC}	MIN	TYP	MAX	UNIT
f_{TA}	Timer_A input clock frequency	Internal: SMCLK or ACLK, External: TACLK, duty cycle = 50% ±10%	2 V, 3 V			16	MHz
$t_{TA,cap}$	Timer_A capture timing	All capture inputs, minimum pulse duration required for capture	2 V, 3 V	20			ns

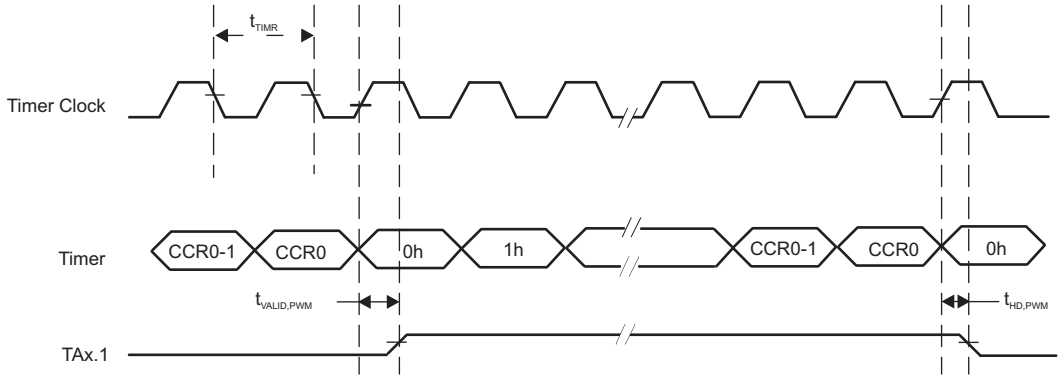

Figure 5-10. Timer PWM Mode

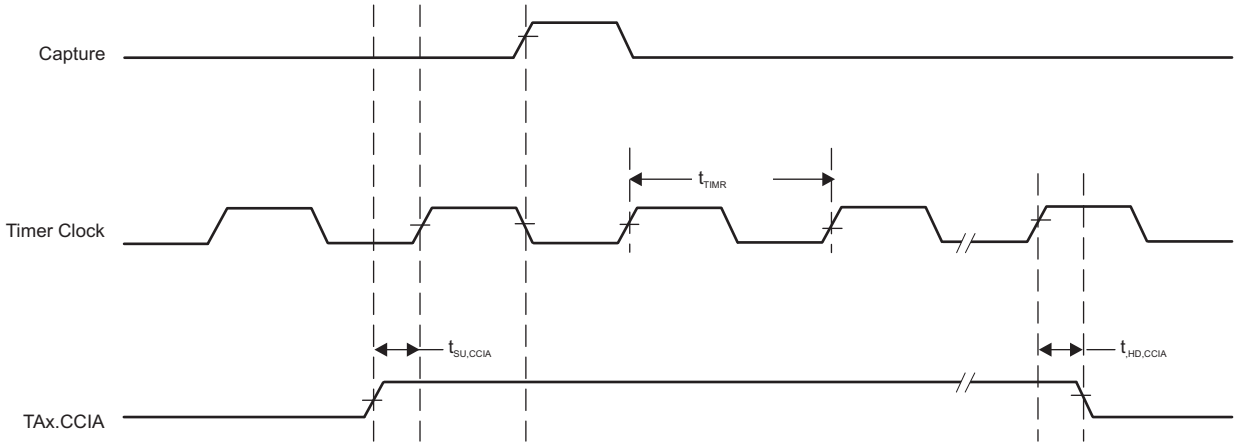

Figure 5-11. Timer Capture Mode

5.11.7 eUSCI

Table 5-14 lists the supported frequencies of the eUSCI in UART mode.

Table 5-14. eUSCI (UART Mode) Clock Frequency

over recommended ranges of supply voltage and operating free-air temperature (unless otherwise noted)

PARAMETER		TEST CONDITIONS	V_{CC}	MIN	MAX	UNIT
f_{eUSCI}	eUSCI input clock frequency	Internal: SMCLK or MODCLK, External: UCLK, duty cycle = 50% ±10%	2 V, 3 V		16	MHz
f_{BITCLK}	BITCLK clock frequency (equals baud rate in Mbaud)		2 V, 3 V		5	MHz

Table 5-15 lists the characteristics of the eUSCI in UART mode.

Table 5-15. eUSCI (UART Mode)

over recommended ranges of supply voltage and operating free-air temperature (unless otherwise noted)

PARAMETER		TEST CONDITIONS	V_{CC}	TYP	UNIT
t_t	UART receive deglitch time (1)	UCGLITx = 0	2 V, 3 V	12	ns
		UCGLITx = 1		40	
		UCGLITx = 2		68	
		UCGLITx = 3		110	

(1) Pulses on the UART receive input (UCxRX) shorter than the UART receive deglitch time are suppressed. To ensure that pulses are correctly recognized, their duration should exceed the maximum specification of the deglitch time.

Table 5-16 lists the supported frequencies of the eUSCI in SPI master mode.

Table 5-16. eUSCI (SPI Master Mode) Clock Frequency

over recommended ranges of supply voltage and operating free-air temperature (unless otherwise noted)

PARAMETER		TEST CONDITIONS	MIN	MAX	UNIT
f_{eUSCI}	eUSCI input clock frequency	Internal: SMCLK or MODCLK, duty cycle = 50% ±10%		8	MHz

Table 5-17 lists the characteristics of the eUSCI in SPI master mode.

Table 5-17. eUSCI (SPI Master Mode)

over recommended ranges of supply voltage and operating free-air temperature (unless otherwise noted) (1)

PARAMETER		TEST CONDITIONS	V_{CC}	MIN	MAX	UNIT
$t_{STE,LEAD}$	STE lead time, STE active to clock	UCSTEM = 0, UCMODEx = 01 or 10		1		UCxCLK cycles
		UCSTEM = 1, UCMODEx = 01 or 10				
$t_{STE,LAG}$	STE lag time, last clock to STE inactive	UCSTEM = 0, UCMODEx = 01 or 10		1		UCxCLK cycles
		UCSTEM = 1, UCMODEx = 01 or 10				
$t_{SU,MI}$	SOMI input data setup time		2 V	45		ns
			3 V	35		
$t_{HD,MI}$	SOMI input data hold time		2 V	0		ns
			3 V	0		
$t_{VALID,MO}$	SIMO output data valid time (2)	UCLK edge to SIMO valid, C_L = 20 pF	2 V		20	ns
			3 V		20	
$t_{HD,MO}$	SIMO output data hold time (3)	C_L = 20 pF	2 V	0		ns
			3 V	0		

(1) $f_{UCxCLK} = 1 / 2t_{LO/HI}$ with $t_{LO/HI} = \max(t_{VALID,MO(eUSCI)} + t_{SU,SI(Slave)}, t_{SU,MI(eUSCI)} + t_{VALID,SO(Slave)})$
For the slave parameters $t_{SU,SI(Slave)}$ and $t_{VALID,SO(Slave)}$, see the SPI parameters of the attached slave.
(2) Specifies the time to drive the next valid data to the SIMO output after the output changing UCLK clock edge. See the timing diagrams in Figure 5-12 and Figure 5-13.
(3) Specifies how long data on the SIMO output is valid after the output changing UCLK clock edge. Negative values indicate that the data on the SIMO output can become invalid before the output changing clock edge observed on UCLK. See the timing diagrams in Figure 5-12 and Figure 5-13.

Copyright © 2015–2019, Texas Instruments Incorporated

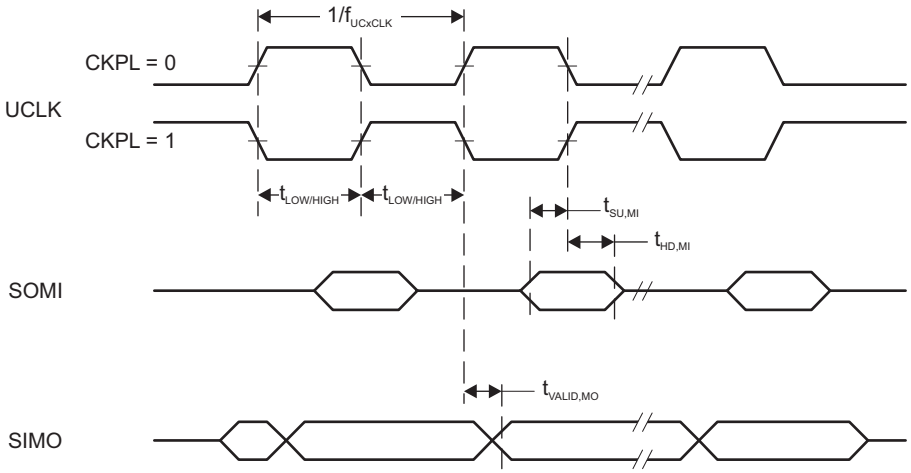

Figure 5-12. SPI Master Mode, CKPH = 0

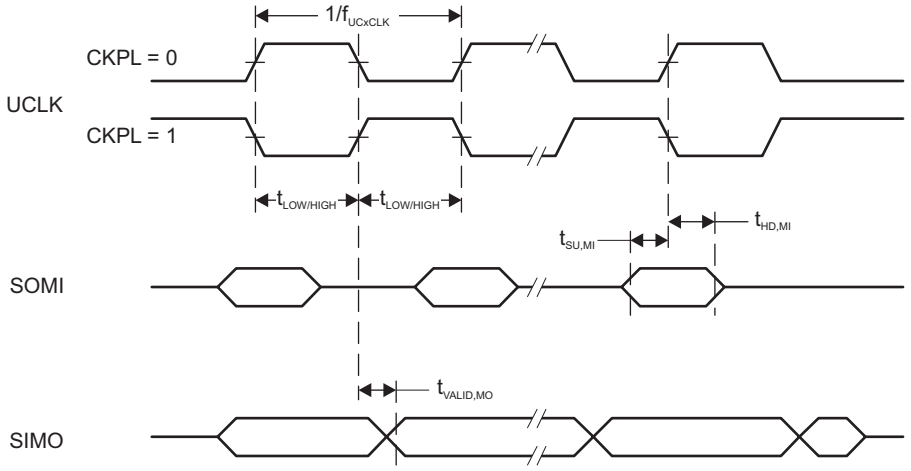

Figure 5-13. SPI Master Mode, CKPH = 1

Table 5-18 lists the characteristics of the eUSCI in SPI slave mode.

Table 5-18. eUSCI (SPI Slave Mode)

over recommended ranges of supply voltage and operating free-air temperature (unless otherwise noted)[1]

PARAMETER		TEST CONDITIONS	V_{CC}	MIN	MAX	UNIT
$t_{STE,LEAD}$	STE lead time, STE active to clock		2 V	55		ns
			3 V	45		
$t_{STE,LAG}$	STE lag time, Last clock to STE inactive		2 V	20		ns
			3 V	20		
$t_{STE,ACC}$	STE access time, STE active to SOMI data out		2 V		65	ns
			3 V		40	
$t_{STE,DIS}$	STE disable time, STE inactive to SOMI high impedance		2 V		40	ns
			3 V		35	
$t_{SU,SI}$	SIMO input data setup time		2 V	6		ns
			3 V	4		
$t_{HD,SI}$	SIMO input data hold time		2 V	12		ns
			3 V	12		
$t_{VALID,SO}$	SOMI output data valid time[2]	UCLK edge to SOMI valid, C_L = 20 pF	2 V		65	ns
			3 V		40	
$t_{HD,SO}$	SOMI output data hold time [3]	C_L = 20 pF	2 V	5		ns
			3 V	5		

(1) $f_{UCxCLK} = 1/2t_{LO/HI}$ with $t_{LO/HI} \geq \max(t_{VALID,MO(Master)} + t_{SU,SI(eUSCI)}, t_{SU,MI(Master)} + t_{VALID,SO(eUSCI)})$
For the master parameters $t_{SU,MI(Master)}$ and $t_{VALID,MO(Master)}$, see the SPI parameters of the attached master.
(2) Specifies the time to drive the next valid data to the SOMI output after the output changing UCLK clock edge. See the timing diagrams in Figure 5-14 and Figure 5-15.
(3) Specifies how long data on the SOMI output is valid after the output changing UCLK clock edge. See the timing diagrams in Figure 5-14 and Figure 5-15.

Copyright © 2015–2019, Texas Instruments Incorporated

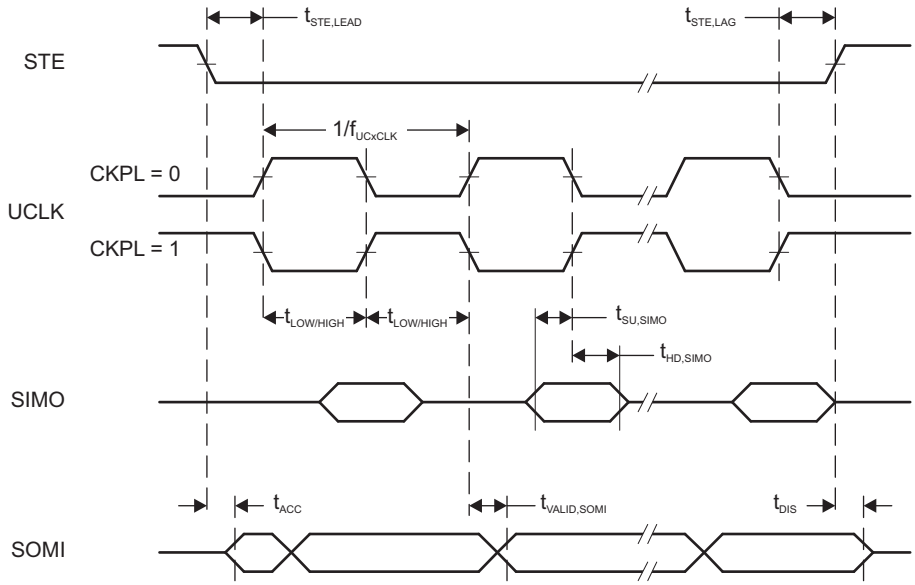

Figure 5-14. SPI Slave Mode, CKPH = 0

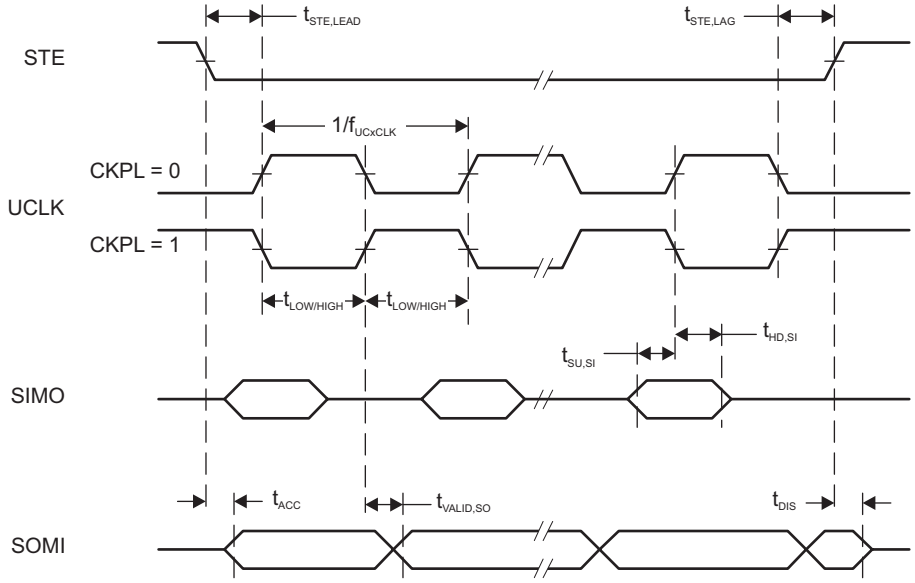

Figure 5-15. SPI Slave Mode, CKPH = 1

Table 5-19 lists the characteristics of the eUSCI in I²C mode.

Table 5-19. eUSCI (I²C Mode)

over recommended ranges of supply voltage and operating free-air temperature (unless otherwise noted) (see Figure 5-16)

PARAMETER		TEST CONDITIONS	V_{CC}	MIN	TYP	MAX	UNIT
f_{eUSCI}	eUSCI input clock frequency	Internal: SMCLK or MODCLK, External: UCLK Duty cycle = 50% ±10%				16	MHz
f_{SCL}	SCL clock frequency		2 V, 3 V	0		400	kHz
$t_{HD,STA}$	Hold time (repeated) START	f_{SCL} = 100 kHz	2 V, 3 V	4.0			µs
		f_{SCL} > 100 kHz		0.6			
$t_{SU,STA}$	Setup time for a repeated START	f_{SCL} = 100 kHz	2 V, 3 V	4.7			µs
		f_{SCL} > 100 kHz		0.6			
$t_{HD,DAT}$	Data hold time		2 V, 3 V	0			ns
$t_{SU,DAT}$	Data setup time		2 V, 3 V	250			ns
$t_{SU,STO}$	Setup time for STOP	f_{SCL} = 100 kHz	2 V, 3 V	4.0			µs
		f_{SCL} > 100 kHz		0.6			
t_{SP}	Pulse duration of spikes suppressed by input filter	UCGLITx = 0	2 V, 3 V	50		600	ns
		UCGLITx = 1		25		300	
		UCGLITx = 2		12.5		150	
		UCGLITx = 3		6.3		75	
$t_{TIMEOUT}$	Clock low time-out	UCCLTOx = 1	2 V, 3 V		27		ms
		UCCLTOx = 2			30		
		UCCLTOx = 3			33		

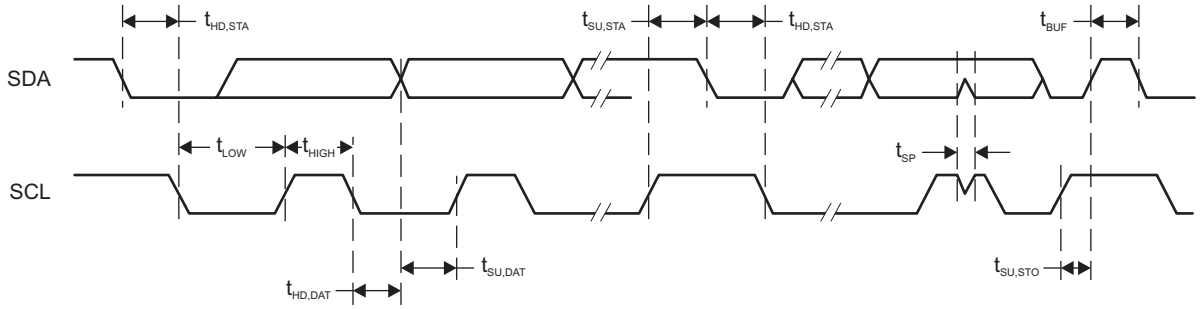

Figure 5-16. I²C Mode Timing

Copyright © 2015–2019, Texas Instruments Incorporated

5.11.8 ADC

Table 5-20 lists the input requirements of the ADC.

Table 5-20. ADC, Power Supply and Input Range Conditions

over operating free-air temperature range (unless otherwise noted)

PARAMETER		TEST CONDITIONS	V_{CC}	MIN	TYP	MAX	UNIT
DV_{CC}	ADC supply voltage			2.0		3.6	V
$V_{(Ax)}$	Analog input voltage range	All ADC pins		0		DV_{CC}	V
I_{ADC}	Operating supply current into DVCC terminal, reference current not included, repeat-single-channel mode	f_{ADCCLK} = 5 MHz, ADCON = 1, REFON = 0, SHT0 = 0, SHT1 = 0, ADCDIV = 0, ADCCONSEQx = 10b	2 V		185		µA
			3 V		207		
C_I	Input capacitance	Only one terminal Ax can be selected at one time, from the pad to the ADC capacitor array, including wiring and pad	2.2 V		1.6	2.0	pF
$R_{I,MUX}$	Input MUX ON resistance	DV_{CC} = 2 V, 0 V ≤ V_{Ax} ≤ DV_{CC}				2	kΩ
$R_{I,Misc}$	Input miscellaneous resistance				34		kΩ

Table 5-21 lists the timing parameters of the ADC.

Table 5-21. ADC, 10-Bit Timing Parameters

over operating free-air temperature range (unless otherwise noted)

PARAMETER		TEST CONDITIONS	V_{CC}	MIN	TYP	MAX	UNIT
f_{ADCCLK}		For specified performance of ADC linearity parameters	2 V to 3.6 V	0.45	5	5.5	MHz
f_{ADCOSC}	Internal ADC oscillator (MODOSC)	ADCDIV = 0, f_{ADCCLK} = f_{ADCOSC}	2 V to 3.6 V	4.5	5.0	5.5	MHz
$t_{CONVERT}$	Conversion time	REFON = 0, Internal oscillator, 10 ADCCLK cycles, 10-bit mode, f_{ADCOSC} = 4.5 MHz to 5.5 MHz	2 V to 3.6 V	2.18		2.67	µs
		External f_{ADCCLK} from ACLK or SMCLK, ADCSSEL ≠ 0	2 V to 3.6 V		12 × 1 / f_{ADCCLK}		
t_{ADCON}	Turnon settling time of the ADC	The error in a conversion started after t_{ADCON} is less than ±0.5 LSB, Reference and input signal already settled				100	ns
t_{Sample}	Sampling time	R_S = 1000 Ω, R_I(1) = 36000 Ω, C_I = 3.5 pF, Approximately 8 Tau (t) are required for an error of less than ±0.5 LSB(2)	2 V	1.5			µs
			3 V	2.0			

(1) $R_I = R_{I,MUX} + R_{I,Misc}$
(2) $t_{Sample} = \ln(2^{n+1}) \times \tau$, where n = ADC resolution, $\tau = (R_I + R_S) \times C_I$

Table 5-22 lists the linearity parameters of the ADC.

Table 5-22. ADC, 10-Bit Linearity Parameters

over operating free-air temperature range (unless otherwise noted)

PARAMETER		TEST CONDITIONS	V_{CC}	MIN	TYP	MAX	UNIT
E_I	Integral linearity error (10-bit mode)	V_{eref+} as reference	2.4 V to 3.6 V	–2		2	LSB
	Integral linearity error (8-bit mode)		2 V to 3.6 V	–2		2	
E_D	Differential linearity error (10-bit mode)	V_{eref+} as reference	2.4 V to 3.6 V	–1		1	LSB
	Differential linearity error (8-bit mode)		2 V to 3.6 V	–1		1	
E_O	Offset error (10-bit mode)	V_{eref+} as reference	2.4 V to 3.6 V	–6.5		6.5	mV
	Offset error (8-bit mode)		2 V to 3.6 V	–6.5		6.5	
E_G	Gain error (10-bit mode)	V_{eref+} as reference	2.4 V to 3.6 V	–2.0		2.0	LSB
		Internal 1.5-V reference		–3.0%		3.0%	
	Gain error (8-bit mode)	V_{eref+} as reference	2 V to 3.6 V	–2.0		2.0	LSB
		Internal 1.5-V reference		–3.0%		3.0%	
E_T	Total unadjusted error (10-bit mode)	V_{eref+} as reference	2.4 V to 3.6 V	–2.0		2.0	LSB
		Internal 1.5-V reference		–3.0%		3.0%	
	Total unadjusted error (8-bit mode)	V_{eref+} as reference	2 V to 3.6 V	–2.0		2.0	LSB
		Internal 1.5-V reference		–3.0%		3.0%	
V_{SENSOR}	See (1)	ADCON = 1, INCH = 0Ch, T_A = 0°C	3 V		913		mV
TC_{SENSOR}	See (2)	ADCON = 1, INCH = 0Ch	3 V		3.35		mV/°C
t_{SENSOR} (sample)	Sample time required if channel 12 is selected (3)	ADCON = 1, INCH = 0Ch, Error of conversion result ≤1 LSB, AM and all LPMs above LPM3	3 V	30			µs
		ADCON = 1, INCH = 0Ch, Error of conversion result ≤1 LSB, LPM3	3 V	100			

(1) The temperature sensor offset can vary significantly. TI recommends a single-point calibration to minimize the offset error of the built-in temperature sensor.
(2) The device descriptor structure contains calibration values for 30°C and 85°C for each available reference voltage level. The sensor voltage can be computed as $V_{SENSE} = TC_{SENSOR} \times$ (Temperature, °C) + V_{SENSOR} , where TC_{SENSOR} and V_{SENSOR} can be computed from the calibration values for higher accuracy.
(3) The typical equivalent impedance of the sensor is 700 kΩ. The sample time required includes the sensor on time, $t_{SENSOR(on)}$.

Copyright © 2015–2019, Texas Instruments Incorporated

5.11.9 FRAM

Table 5-23 lists the characteristics of the FRAM.

Table 5-23. FRAM

over recommended ranges of supply voltage and operating free-air temperature (unless otherwise noted)

PARAMETER		TEST CONDITIONS	MIN	TYP	MAX	UNIT
	Read and write endurance		10^{15}			cycles
$t_{Retention}$	Data retention duration	T_J = 25°C	100			years
		T_J = 70°C	40			
		T_J = 85°C	10			
I_{WRITE}	Current to write into FRAM			I_{READ} (1)		nA
I_{ERASE}	Erase current			N/A (2)		nA
t_{WRITE}	Write time			t_{READ} (3)		ns
t_{READ}	Read time	NWAITSx = 0		$1/f_{SYSTEM}$ (4)		ns
		NWAITSx = 1		$2/f_{SYSTEM}$ (4)		

(1) Writing to FRAM does not require a setup sequence or additional power when compared to reading from FRAM. The FRAM read current I_{READ} is included in the active mode current consumption parameter $I_{AM,FRAM}$.
(2) FRAM does not require a special erase sequence.
(3) Writing into FRAM is as fast as reading.
(4) The maximum read (and write) speed is specified by f_{SYSTEM} using the appropriate wait state settings (NWAITSx).

5.11.10 Debug and Emulation

Table 5-24 lists the characteristics of the Spy-Bi-Wire interface.

Table 5-24. JTAG, Spy-Bi-Wire Interface

over recommended ranges of supply voltage and operating free-air temperature (unless otherwise noted) (see Figure 5-17)

PARAMETER		V_{CC}	MIN	TYP	MAX	UNIT
f_{SBW}	Spy-Bi-Wire input frequency	2 V, 3 V	0		10	MHz
$t_{SBW,Low}$	Spy-Bi-Wire low clock pulse duration	2 V, 3 V	0.028		15	µs
$t_{SU,\ SBWTDIO}$	SBWTDIO setup time (before falling edge of SBWTCK in TMS and TDI slot, Spy-Bi-Wire)	2 V, 3 V	4			ns
$t_{HD,\ SBWTDIO}$	SBWTDIO hold time (after rising edge of SBWTCK in TMS and TDI slot, Spy-Bi-Wire)	2 V, 3 V	19			ns
$t_{Valid,\ SBWTDIO}$	SBWTDIO data valid time (after falling edge of SBWTCK in TDO slot, Spy-Bi-Wire)	2 V, 3 V			31	ns
$t_{SBW,\ En}$	Spy-Bi-Wire enable time (TEST high to acceptance of first clock edge) (1)	2 V, 3 V			110	µs
$t_{SBW,Ret}$	Spy-Bi-Wire return to normal operation time (2)	2 V, 3 V	15		100	µs
$R_{internal}$	Internal pulldown resistance on TEST	2 V, 3 V	20	35	50	kΩ

(1) Tools that access the Spy-Bi-Wire interface must wait for the $t_{SBW,En}$ time after pulling the TEST/SBWTCK pin high before applying the first SBWTCK clock edge.
(2) Maximum $t_{SBW,Ret}$ time after pulling or releasing the TEST/SBWTCK pin low until the Spy-Bi-Wire pins revert from their Spy-Bi-Wire function to their application function. This time applies only if the Spy-Bi-Wire mode is selected.

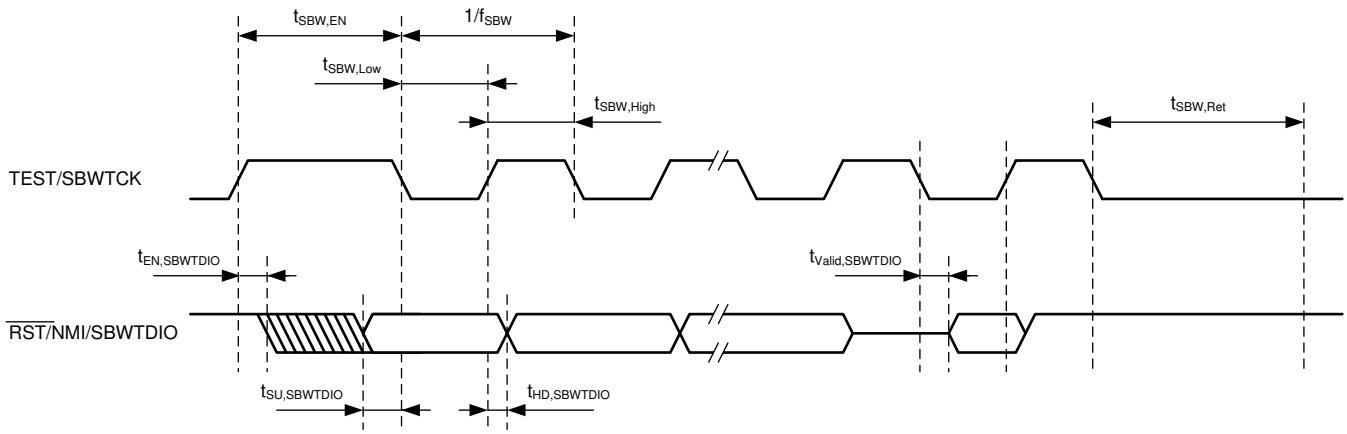

Figure 5-17. JTAG Spy-Bi-Wire Timing

Copyright © 2015–2019, Texas Instruments Incorporated

Table 5-25 lists the characteristics of the 4-wire JTAG interface.

Table 5-25. JTAG, 4-Wire Interface

over recommended ranges of supply voltage and operating free-air temperature (unless otherwise noted) (see Figure 5-18)

PARAMETER		V_{CC}	MIN	TYP	MAX	UNIT
f_{TCK}	TCK input frequency(1)	2 V, 3 V	0		10	MHz
$t_{TCK,Low}$	TCK low clock pulse duration	2 V, 3 V	15			ns
$t_{TCK,High}$	TCK high clock pulse duration	2 V, 3 V	15			ns
$t_{SU,TMS}$	TMS setup time (before rising edge of TCK)	2 V, 3 V	11			ns
$t_{HD,TMS}$	TMS hold time (after rising edge of TCK)	2 V, 3 V	3			ns
$t_{SU,TDI}$	TDI setup time (before rising edge of TCK)	2 V, 3 V	13			ns
$t_{HD,TDI}$	TDI hold time (after rising edge of TCK)	2 V, 3 V	5			ns
$t_{Z\text{-}Valid,TDO}$	TDO high impedance to valid output time (after falling edge of TCK)	2 V, 3 V			26	ns
$t_{Valid,TDO}$	TDO to new valid output time (after falling edge of TCK)	2 V, 3 V			26	ns
$t_{Valid\text{-}Z,TDO}$	TDO valid to high-impedance output time (after falling edge of TCK)	2 V, 3 V			26	ns
$t_{JTAG,Ret}$	Spy-Bi-Wire return to normal operation time		15		100	µs
$R_{internal}$	Internal pulldown resistance on TEST	2 V, 3 V	20	35	50	kΩ

(1) f_{TCK} may be restricted to meet the timing requirements of the module selected.

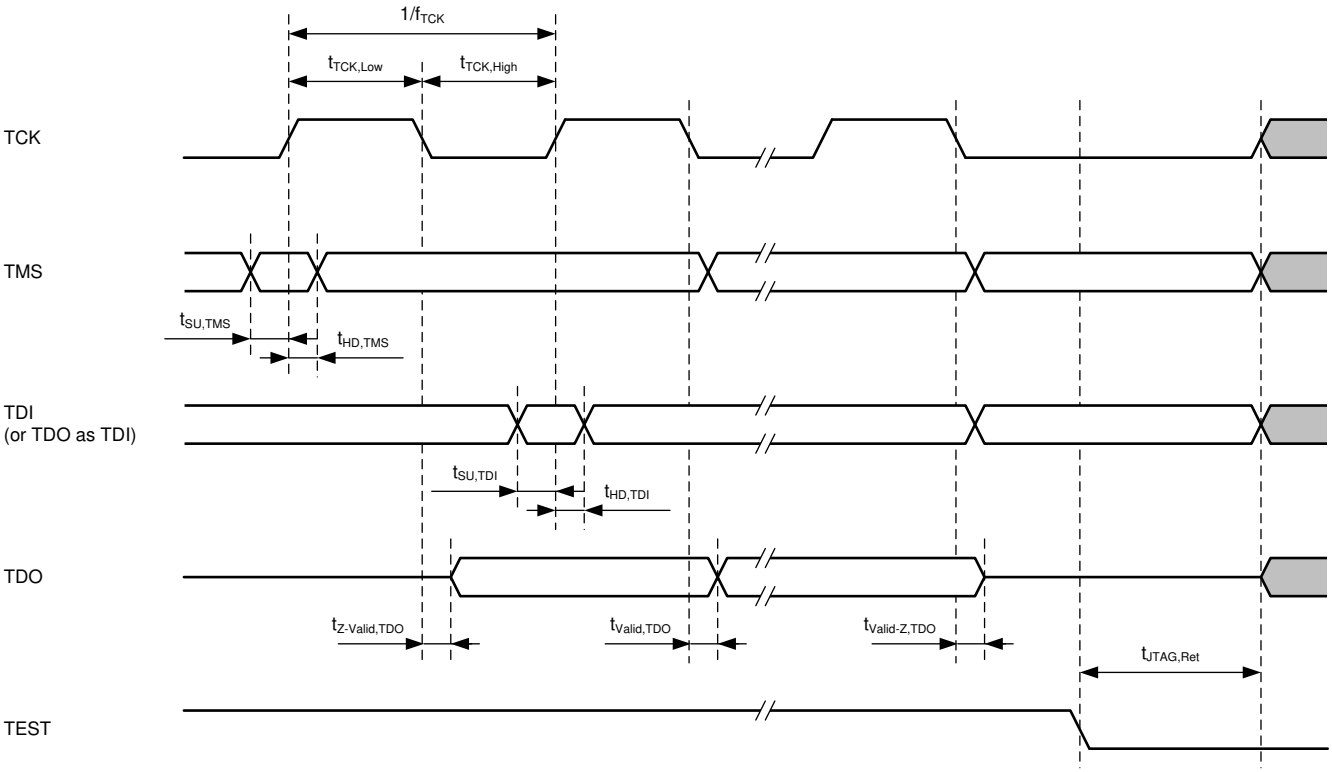

Figure 5-18. JTAG 4-Wire Timing

6 Detailed Description

6.1 Overview

The MSP430FR2433 is an ultra-low-power MCU. The architecture, combined with extensive low-power modes, is optimized to achieve extended battery life in, for example, portable measurement applications. The MCU features four 16-bit timers, three eUSCIs that support UART, SPI, and I^2C, a hardware multiplier, an RTC module with alarm capabilities, and a high-performance 10-bit ADC.

6.2 CPU

The MSP430 CPU has a 16-bit RISC architecture that is highly transparent to the application. All operations, other than program-flow instructions, are performed as register operations in conjunction with seven addressing modes for source operand and four addressing modes for destination operand.

The CPU is integrated with 16 registers that provide reduced instruction execution time. The register-to-register operation execution time is one cycle of the CPU clock.

Four of the registers, R0 to R3, are dedicated as program counter (PC), stack pointer (SP), status register (SR), and constant generator (CG), respectively. The remaining registers are general-purpose registers.

Peripherals are connected to the CPU using data, address, and control buses. Peripherals can be managed with all instructions.

6.3 Operating Modes

The MSP430FR2433 MCU has one active mode and several software-selectable low-power modes of operation (see Table 6-1). An interrupt event can wake the MCU from low-power mode (LPM0 or LPM3), service the request, and restore the MCU back to the low-power mode on return from the interrupt program. Low-power modes LPM3.5 and LPM4.5 disable the core supply to minimize power consumption.

Table 6-1. Operating Modes

MODE		AM	LPM0	LPM3	LPM4	LPM3.5	LPM4.5
		ACTIVE MODE (FRAM ON)	CPU OFF	STANDBY	OFF	ONLY RTC	SHUTDOWN
Maximum system clock		16 MHz	16 MHz	40 kHz	0	40 kHz	0
Power consumption at 25°C, 3 V		126 µA/MHz	40 µA/MHz	1.2 µA with RTC counter only in LFXT	0.49 µA without SVS	0.73 µA with RTC counter only in LFXT	16 nA without SVS
Wake-up time		N/A	Instant	10 µs	10 µs	350 µs	350 µs
Wake-up events		N/A	All	All	I/O	RTC I/O	I/O
Power	Regulator	Full Regulation	Full Regulation	Partial Power Down	Partial Power Down	Partial Power Down	Power Down
	SVS	On	On	Optional	Optional	Optional	Optional
	Brownout	On	On	On	On	On	On
Clock(1)	MCLK	Active	Off	Off	Off	Off	Off
	SMCLK	Optional	Optional	Off	Off	Off	Off
	FLL	Optional	Optional	Off	Off	Off	Off
	DCO	Optional	Optional	Off	Off	Off	Off
	MODCLK	Optional	Optional	Off	Off	Off	Off
	REFO	Optional	Optional	Optional	Off	Off	Off
	ACLK	Optional	Optional	Optional	Off	Off	Off
	XT1CLK	Optional	Optional	Optional	Off	Optional	Off
	VLOCLK	Optional	Optional	Optional	Off	Optional	Off

(1) The status shown for LPM4 applies to internal clocks only.

Copyright © 2015–2019, Texas Instruments Incorporated

Table 6-1. Operating Modes (continued)

MODE		AM	LPM0	LPM3	LPM4	LPM3.5	LPM4.5
		ACTIVE MODE (FRAM ON)	CPU OFF	STANDBY	OFF	ONLY RTC	SHUTDOWN
Core	CPU	On	Off	Off	Off	Off	Off
	FRAM	On	On	Off	Off	Off	Off
	RAM	On	On	On	On	Off	Off
	Backup memory(2)	On	On	On	On	On	Off
Peripherals	Timer0_A3	Optional	Optional	Optional	Off	Off	Off
	Timer1_A3	Optional	Optional	Optional	Off	Off	Off
	Timer2_A2	Optional	Optional	Optional	Off	Off	Off
	Timer3_A2	Optional	Optional	Optional	Off	Off	Off
	WDT	Optional	Optional	Optional	Off	Off	Off
	eUSCI_A0	Optional	Optional	Off	Off	Off	Off
	eUSCI_A1	Optional	Optional	Off	Off	Off	Off
	eUSCI_B0	Optional	Optional	Off	Off	Off	Off
	CRC	Optional	Optional	Off	Off	Off	Off
	ADC	Optional	Optional	Optional	Off	Off	Off
	RTC	Optional	Optional	Optional	Off	Optional	Off
I/O	General-purpose digital input/output	On	Optional	State Held	State Held	State Held	State Held

(2) Backup memory contains 32 bytes of register space in peripheral memory. See Table 6-24 and Table 6-43 for its memory allocation.

NOTE

XT1CLK and VLOCLK can be active during LPM4 if requested by low-frequency peripherals, such as RTC or WDT.

6.4 Interrupt Vector Addresses

The interrupt vectors and the power-up start address are in the address range 0FFFFh to 0FF80h (see Table 6-2). The vector contains the 16-bit address of the appropriate interrupt-handler instruction sequence.

Table 6-2. Interrupt Sources, Flags, and Vectors

INTERRUPT SOURCE	INTERRUPT FLAG	SYSTEM INTERRUPT	WORD ADDRESS	PRIORITY
System Reset Power up, Brownout, Supply supervisor External reset RST Watchdog time-out, Key violation FRAM access time error FRAM uncorrectable bit error detection Software POR, BOR FLL unlock error	PMMPORIFG, PMMBORIFG, SVSHIFG PMMRSTIFG WDTIFG ACCTEIFG UBDIFG SYSRSTIV FLLUNLOCKIFG	Reset	FFFEh	63, Highest
System NMI Vacant memory access JTAG mailbox FRAM bit error detection	VMAIFG JMBINIFG, JMBOUTIFG CBDIFG, UBDIFG	Nonmaskable	FFFCh	62
User NMI External NMI Oscillator fault	NMIIFG OFIFG	Nonmaskable	FFFAh	61
Timer0_A3	TA0CCR0 CCIFG0	Maskable	FFF8h	60
Timer0_A3	TA0CCR1 CCIFG1, TA0CCR2 CCIFG2, TA0IFG (TA0IV)	Maskable	FFF6h	59

Table 6-2. Interrupt Sources, Flags, and Vectors (continued)

INTERRUPT SOURCE	INTERRUPT FLAG	SYSTEM INTERRUPT	WORD ADDRESS	PRIORITY
Timer1_A3	TA1CCR0 CCIFG0	Maskable	FFF4h	58
Timer1_A3	TA1CCR1 CCIFG1, TA1CCR2 CCIFG2, TA1IFG (TA1IV)	Maskable	FFF2h	57
Timer2_A2	TA2CCR0 CCIFG0	Maskable	FFF0h	56
Timer2_A2	TA2CCR1 CCIFG1, TA2IFG (TA2IV)		FFEEh	55
Timer3_A2	TA3CCR0 CCIFG0	Maskable	FFECh	54
Timer3_A2	TA3CCR1 CCIFG1, TA3IFG (TA3IV)		FFEAh	53
RTC	RTCIFG	Maskable	FFE8h	52
Watchdog timer interval mode	WDTIFG	Maskable	FFE6h	51
eUSCI_A0 receive or transmit	UCTXCPTIFG, UCSTTIFG, UCRXIFG, UCTXIFG (UART mode) UCRXIFG, UCTXIFG (SPI mode) (UCA0IV)	Maskable	FFE4h	50
eUSCI_A1 receive or transmit	UCTXCPTIFG, UCSTTIFG, UCRXIFG, UCTXIFG (UART mode) UCRXIFG, UCTXIFG (SPI mode) (UCA1IV)	Maskable	FFE2h	49
eUSCI_B0 receive or transmit	UCB0RXIFG, UCB0TXIFG (SPI mode) UCALIFG, UCNACKIFG, UCSTTIFG, UCSTPIFG, UCRXIFG0, UCTXIFG0, UCRXIFG1, UCTXIFG1, UCRXIFG2, UCTXIFG2, UCRXIFG3, UCTXIFG3, UCCNTIFG, UCBIT9IFG (I^2C mode) (UCB0IV)	Maskable	FFE0h	48
ADC	ADCIFG0, ADCINIFG, ADCLOIFG, ADCHIIFG, ADCTOVIFG, ADCOVIFG (ADCIV)	Maskable	FFDEh	47
P1	P1IFG.0 to P1IFG.7 (P1IV)	Maskable	FFDCh	46
P2	P2IFG.0 to P2IFG.7 (P2IV)	Maskable	FFDAh	45, Lowest
Reserved	Reserved	Maskable	FFD6h to FF88h	
Signatures	BSL Signature 2		0FF86h	
	BSL Signature 1		0FF84h	
	JTAG Signature 2		0FF82h	
	JTAG Signature 1		0FF80h	

Copyright © 2015–2019, Texas Instruments Incorporated

6.5 Bootloader (BSL)

The BSL lets users program the FRAM or RAM using either the UART serial interface or the I^{2}C interface. Access to the MCU memory through the BSL is protected by an user-defined password. Use of the BSL requires four pins (see Table 6-3 and Table 6-4). BSL entry requires a specific entry sequence on the $\overline{\text{RST}}$/NMI/SBWTDIO and TEST/SBWTCK pins. This device supports the blank device detection to automatically invoke the BSL, skipping this special entry sequence, to save time and simplify onboard programming. For a complete description of the features of the BSL, see the MSP430 FRAM Device Bootloader (BSL) User's Guide.

Table 6-3. UART BSL Pin Requirements and Functions

DEVICE SIGNAL	BSL FUNCTION
$\overline{\text{RST}}$/NMI/SBWTDIO	Entry sequence signal
TEST/SBWTCK	Entry sequence signal
P1.4	Data transmit
P1.5	Data receive
VCC	Power supply
VSS	Ground supply

Table 6-4. I^{2}C BSL Pin Requirements and Functions

DEVICE SIGNAL	BSL FUNCTION
$\overline{\text{RST}}$/NMI/SBWTDIO	Entry sequence signal
TEST/SBWTCK	Entry sequence signal
P1.2	Data transmit and receive
P1.3	Clock
VCC	Power supply
VSS	Ground supply

6.6 JTAG Standard Interface

The MSP low-power microcontrollers support the standard JTAG interface, which requires four signals for sending and receiving data. The JTAG signals are shared with general-purpose I/O. The TEST/SBWTCK pin enables the JTAG signals. In addition to these signals, the $\overline{\text{RST}}$/NMI/SBWTDIO is required to interface with MSP430 development tools and device programmers. Table 6-5 lists the JTAG pin requirements. For further details on interfacing to development tools and device programmers, see the *MSP430 Hardware Tools User's Guide*. For details on using the JTAG interface, see *MSP430 Programming With the JTAG Interface*.

Table 6-5. JTAG Pin Requirements and Function

DEVICE SIGNAL	DIRECTION	JTAG FUNCTION
P1.4/UCA0TXD/UCA0SIMO/TA1.2/TCK/A4/VREF+	IN	JTAG clock input
P1.5/UCA0RXD/UCA0SOMI/TA1.1/TMS/A5	IN	JTAG state control
P1.6/UCA0CLK/TA1CLK/TDI/TCLK/A6	IN	JTAG data input, TCLK input
P1.7/UCA0STE/SMCLK/TDO/A7	OUT	JTAG data output
TEST/SBWTCK	IN	Enable JTAG pins
$\overline{\text{RST}}$/NMI/SBWTDIO	IN	External reset
DVCC	–	Power supply
DVSS	–	Ground supply

6.7 Spy-Bi-Wire Interface (SBW)

The MSP low-power microcontrollers support the 2-wire SBW interface. SBW can be used to interface with MSP development tools and device programmers. Table 6-6 lists the SBW interface pin requirements. For further details on interfacing to development tools and device programmers, see the *MSP430 Hardware Tools User's Guide*. For details on using the SBW interface, see the *MSP430 Programming With the JTAG Interface*.

Table 6-6. Spy-Bi-Wire Pin Requirements and Functions

DEVICE SIGNAL	DIRECTION	SBW FUNCTION
TEST/SBWTCK	IN	Spy-Bi-Wire clock input
$\overline{\text{RST}}$/NMI/SBWTDIO	IN, OUT	Spy-Bi-Wire data input and output
DVCC	–	Power supply
DVSS	–	Ground supply

6.8 FRAM

The FRAM can be programmed using the JTAG port, SBW, the BSL, or in-system by the CPU. Features of the FRAM include:

- Byte and word access capability
- Programmable wait state generation
- Error correction coding (ECC)

6.9 Memory Protection

The device features memory protection for user access authority and write protection, including options to:

- Secure the whole memory map to prevent unauthorized access from JTAG port or BSL, by writing JTAG and BSL signatures using the JTAG port, SBW, the BSL, or in-system by the CPU.
- Enable write protection to prevent unwanted write operation to FRAM contents by setting the control bits in the System Configuration 0 register. For detailed information, see the *System Resets, Interrupts, and Operating Modes, System Control Module (SYS)* chapter in the *MP430FR4xx and MP430FR2xx Family User's Guide*.

Copyright © 2015–2019, Texas Instruments Incorporated

6.10 Peripherals

Peripherals are connected to the CPU through data, address, and control buses. All peripherals can be handled by using all instructions in the memory map. For complete module description, see the *MP430FR4xx and MP430FR2xx Family User's Guide*.

6.10.1 Power-Management Module (PMM)

The PMM includes an integrated voltage regulator that supplies the core voltage to the device. The PMM also includes supply voltage supervisor (SVS) and brownout protection. The brownout reset circuit (BOR) is implemented to provide the proper internal reset signal to the device during power on and power off. The SVS circuitry detects if the supply voltage drops below a user-selectable safe level. SVS circuitry is available on the primary supply.

The device contains two on-chip reference: 1.5 V for internal reference and 1.2 V for external reference.

The 1.5-V reference is internally connected to ADC channel 13. DVCC is internally connected to ADC channel 15. When DVCC is set as the reference voltage for ADC conversion, the DVCC can be easily represent as Equation 1 by using ADC sampling 1.5-V reference without any external components support.

$$\text{DVCC} = (1023 \times 1.5\ \text{V}) \div \text{1.5-V reference ADC result} \quad (1)$$

A 1.2-V reference voltage can be buffered and output to P1.4/MCLK/TCK/A4/VREF+, when EXTREFEN = 1 in the PMMCTL1 register. ADC channel 4 can also be selected to monitor this voltage. For more detailed information, see the *MP430FR4xx and MP430FR2xx Family User's Guide*.

6.10.2 Clock System (CS) and Clock Distribution

The clock system includes a 32-kHz crystal oscillator (XT1), an internal very-low-power low-frequency oscillator (VLO), an integrated 32-kHz RC oscillator (REFO), an integrated internal digitally controlled oscillator (DCO) that may use frequency-locked loop (FLL) locking with internal or external 32-kHz reference clock, and an on-chip asynchronous high-speed clock (MODOSC). The clock system is designed for cost-effective designs with minimal external components. A fail-safe mechanism is included for XT1. The clock system module offers the following clock signals.

- Main Clock (MCLK): The system clock used by the CPU and all relevant peripherals accessed by the bus. All clock sources except MODOSC can be selected as the source with a predivider of 1, 2, 4, 8, 16, 32, 64, or 128.
- Sub-Main Clock (SMCLK): The subsystem clock used by the peripheral modules. SMCLK derives from the MCLK with a predivider of 1, 2, 4, or 8. This means SMCLK is always equal to or less than MCLK.
- Auxiliary Clock (ACLK): This clock is derived from the external XT1 clock or internal REFO clock up to 40 kHz.

All peripherals may have one or several clock sources depending on specific functionality. Table 6-7 lists the clock distribution used in this device.

Table 6-7. Clock Distribution

	CLOCK SOURCE SELECT BITS	MCLK	SMCLK	ACLK	MODCLK	XT1CLK	VLOCLK	EXTERNAL PIN
Frequency Range		DC to 16 MHz	DC to 16 MHz	DC to 40 kHz	5 MHz ±10%	DC to 40 kHz	10 kHz ±50%	–
CPU	N/A	Default	–	–	–	–	–	–
FRAM	N/A	Default	–	–	–	–	–	–
RAM	N/A	Default	–	–	–	–	–	–
CRC	N/A	Default	–	–	–	–	–	–
I/O	N/A	Default	–	–	–	–	–	–
TA0	TASSEL	–	10b	01b	–	–	–	00b (TA0CLK pin)
TA1	TASSEL	–	10b	01b	–	–	–	00b (TA1CLK pin)
TA2	TASSEL	–	10b	01b	–	–	–	–
TA3	TASSEL	–	10b	01b	–	–	–	–
eUSCI_A0	UCSSEL	–	10b or 11b	–	01b	–	–	00b (UCA0CLK pin)
eUSCI_A1	UCSSEL	–	10b or 11b	–	01b	–	–	00b (UCA1CLK pin)
eUSCI_B0	UCSSEL	–	10b or 11b	–	01b	–	–	00b (UCB0CLK pin)
WDT	WDTSSEL	–	00b	01b	–	–	10b or 11b	–
ADC	ADCSSEL	–	11b	01b	00b	–	–	–
RTC	RTCSS	–	01b	–	–	10b	11b	–

6.10.3 General-Purpose Input/Output Port (I/O)

Up to 19 I/O ports are implemented.

- P1 and P2 are full 8-bit ports; P3 has 3 bits implemented.
- All individual I/O bits are independently programmable.
- Any combination of input, output, and interrupt conditions is possible.
- All ports support programmable pullup or pulldown.
- Edge-selectable interrupt and LPM3.5 and LPM4.5 wake-up input capability is available for P1 and P2.
- Read and write access to port-control registers is supported by all instructions.
- Ports can be accessed byte-wise or word-wise in pairs.

NOTE

Configuration of digital I/Os after BOR reset

To prevent any cross currents during start-up of the device, all port pins are high-impedance with Schmitt triggers and module functions disabled. To enable the I/O functions after a BOR reset, the ports must be configured first and then the LOCKLPM5 bit must be cleared. For details, see the *Configuration After Reset* section in the *Digital I/O* chapter of the *MP430FR4xx and MP430FR2xx Family User's Guide*.

Copyright © 2015–2019, Texas Instruments Incorporated

6.10.4 Watchdog Timer (WDT)

The primary function of the WDT module is to perform a controlled system restart after a software problem occurs. If the selected time interval expires, a system reset is generated. If the watchdog function is not needed in an application, the module can be configured as interval timer and can generate interrupts at selected time intervals. Table 6-8 lists the system clocks that can be used to source the WDT.

Table 6-8. WDT Clocks

WDTSSEL	NORMAL OPERATION (WATCHDOG AND INTERVAL TIMER MODE)
00	SMCLK
01	ACLK
10	VLOCLK
11	Reserved

6.10.5 System (SYS) Module

The SYS module handles many of the system functions within the device. These features include power-on reset (POR) and power-up clear (PUC) handling, NMI source selection and management, reset interrupt vector generators, bootloader entry mechanisms, and configuration management (device descriptors). The SYS module also includes a data exchange mechanism through SBW called a JTAG mailbox mail box that can be used in the application. Table 6-9 summarizes the interrupts that are managed by the SYS module.

Table 6-9. System Module Interrupt Vector Registers

INTERRUPT VECTOR REGISTER	ADDRESS	INTERRUPT EVENT	VALUE	PRIORITY
SYSRSTIV, System Reset	015Eh	No interrupt pending	00h	
		Brownout (BOR)	02h	Highest
		RSTIFG $\overline{\text{RST}}$/NMI (BOR)	04h	
		PMMSWBOR software BOR (BOR)	06h	
		LPMx.5 wake up (BOR)	08h	
		Security violation (BOR)	0Ah	
		Reserved	0Ch	
		SVSHIFG SVSH event (BOR)	0Eh	
		Reserved	10h	
		Reserved	12h	
		PMMSWPOR software POR (POR)	14h	
		WDTIFG watchdog time-out (PUC)	16h	
		WDTPW password violation (PUC)	18h	
		FRCTLPW password violation (PUC)	1Ah	
		Uncorrectable FRAM bit error detection	1Ch	
		Peripheral area fetch (PUC)	1Eh	
		PMMPW PMM password violation (PUC)	20h	
		FLL unlock (PUC)	24h	
		Reserved	22h, 26h to 3Eh	Lowest
SYSSNIV, System NMI	015Ch	No interrupt pending	00h	
		SVS low-power reset entry	02h	Highest
		Uncorrectable FRAM bit error detection	04h	
		Reserved	06h	
		Reserved	08h	
		Reserved	0Ah	
		Reserved	0Ch	
		Reserved	0Eh	
		Reserved	10h	
		VMAIFG Vacant memory access	12h	
		JMBINIFG JTAG mailbox input	14h	
		JMBOUTIFG JTAG mailbox output	16h	
		Correctable FRAM bit error detection	18h	
		Reserved	1Ah to 1Eh	Lowest
SYSUNIV, User NMI	015Ah	No interrupt pending	00h	
		NMIIFG NMI pin or SVS_H event	02h	Highest
		OFIFG oscillator fault	04h	
		Reserved	06h to 1Eh	Lowest

Copyright © 2015–2019, Texas Instruments Incorporated

6.10.6 Cyclic Redundancy Check (CRC)

The 16-bit cyclic redundancy check (CRC) module produces a signature based on a sequence of data values and can be used for data checking purposes. The CRC generation polynomial is compliant with CRC-16-CCITT standard of $x^{16} + x^{12} + x^5 + 1$.

6.10.7 Enhanced Universal Serial Communication Interface (eUSCI_A0, eUSCI_B0)

The eUSCI modules are used for serial data communications. The eUSCI_A module supports either UART or SPI communications. The eUSCI_B module supports either SPI or I^2C communications. Additionally, eUSCI_A supports automatic baud-rate detection and IrDA. Table 6-10 lists the pin configurations that are required for each eUSCI mode.

Table 6-10. eUSCI Pin Configurations

	PIN	UART	SPI
eUSCI_A0	P1.4	TXD	SIMO
	P1.5	RXD	SOMI
	P1.6	–	SCLK
	P1.7	–	STE
eUSCI_A1	P2.6	TXD	SIMO
	P2.5	RXD	SOMI
	P2.4	–	SCLK
	P3.1	–	STE
	PIN	**I^2C**	**SPI**
eUSCI_B0	P1.0	–	STE
	P1.1	–	SCLK
	P1.2	SDA	SIMO
	P1.3	SCL	SOMI

6.10.8 Timers (Timer0_A3, Timer1_A3, Timer2_A2 and Timer3_A2)

The Timer0_A3 and Timer1_A3 modules are 16-bit timers and counters with three capture/compare registers each. Both timers support multiple captures or compares, PWM outputs, and interval timing (see Table 6-11 and Table 6-12). Both timers have extensive interrupt capabilities. Interrupts may be generated from the counter on overflow conditions and from each capture/compare register.

The CCR0 registers on Timer0_A3 and Timer1_A3 are not externally connected and can be used only for hardware period timing and interrupt generation. In Up mode, these CCR0 registers can be used to set the overflow value of the counter.

Table 6-11. Timer0_A3 Signal Connections

PORT PIN	DEVICE INPUT SIGNAL	MODULE INPUT NAME	MODULE BLOCK	MODULE OUTPUT SIGNAL	DEVICE OUTPUT SIGNAL
P1.0	TA0CLK	TACLK	Timer	N/A	
	ACLK (internal)	ACLK			
	SMCLK (internal)	SMCLK			
		CCI0A	CCR0	TA0	
		CCI0B			Timer1_A3 CCI0B input
	DVSS	GND			
	DVCC	VCC			
P1.1	TA0.1	CCI1A	CCR1	TA1	TA0.1
	from RTC (internal)	CCI1B			Timer1_A3 CCI1B input
	DVSS	GND			
	DVCC	VCC			
P1.2	TA0.2	CCI2A	CCR2	TA2	TA0.2
		CCI2B			Timer1_A3 CCI2B input, IR Input
	DVSS	GND			
	DVCC	VCC			

Copyright © 2015–2019, Texas Instruments Incorporated

Table 6-12. Timer1_A3 Signal Connections

PORT PIN	DEVICE INPUT SIGNAL	MODULE INPUT NAME	MODULE BLOCK	MODULE OUTPUT SIGNAL	DEVICE OUTPUT SIGNAL
P1.6	TA1CLK	TACLK	Timer	N/A	
	ACLK (internal)	ACLK			
	SMCLK (internal)	SMCLK			
		CCI0A	CCR0	TA0	
	Timer0_A3 CCR0B output (internal)	CCI0B			
	DVSS	GND			
	DVCC	VCC			
P1.5	TA1.1	CCI1A	CCR1	TA1	TA1.1
	Timer0_A3 CCR1B output (internal)	CCI1B			to ADC trigger
	DVSS	GND			
	DVCC	VCC			
P1.4	TA1.2	CCI2A	CCR2	TA2	TA1.2
	Timer0_A3 CCR2B output (internal)	CCI2B			IR Input
	DVSS	GND			
	DVCC	VCC			

The interconnection of Timer0_A3 and Timer1_A3 can be used to modulate the eUSCI_A pin of UCA0TXD/UCA0SIMO in either ASK or FSK mode, with which a user can easily acquire a modulated infrared command for directly driving an external IR diode. The IR functions are fully controlled by SYS configuration registers 1 including IREN (enable), IRPSEL (polarity select), IRMSEL (mode select), IRDSSEL (data select), and IRDATA (data) bits. For more information, see the *System Resets, Interrupts, and Operating Modes, System Control Module (SYS)* chapter in the *MP430FR4xx and MP430FR2xx Family User's Guide*.

The Timer2_A2 and Timer3_A2 modules are 16-bit timers and counters with two capture/compare registers each. Both timers support multiple captures or compares and interval timing (see Table 6-13 and Table 6-14). Both timers have extensive interrupt capabilities. Interrupts may be generated from the counter on overflow conditions and from each capture register.

The CCR0 registers on Timer2_TA2 and Timer3_TA2 are not externally connected and can be used only for hardware period timing and interrupt generation. In Up mode, these CCR0 registers can be used to set the overflow value of the counter. Timer2_A2 and Timer3_A2 are only internally connected and do not support PWM output.

Table 6-13. Timer2_A2 Signal Connections

DEVICE INPUT SIGNAL	MODULE INPUT NAME	MODULE BLOCK	MODULE OUTPUT SIGNAL	DEVICE OUTPUT SIGNAL
ACLK (internal)	ACLK	Timer	N/A	
SMCLK (internal)	SMCLK			
	CCI0A	CCR0	TA0	
	CCI0B			Timer3_A3 CCI0B input
DVSS	GND			
DVCC	VCC			
	CCI1A	CCR1	CCR1	
	CCI1B			Timer3_A3 CCI1B input
DVSS	GND			
DVCC	VCC			

Table 6-14. Timer3_A2 Signal Connections

DEVICE INPUT SIGNAL	MODULE INPUT NAME	MODULE BLOCK	MODULE OUTPUT SIGNAL	DEVICE OUTPUT SIGNAL
ACLK (internal)	ACLK	Timer	N/A	
SMCLK (internal)	SMCLK			
	CCI0A	CCR0	TA0	
Timer3_A3 CCI0B input	CCI0B			
DVSS	GND			
DVCC	VCC			
	CCI1A	CCR1	CCR1	
Timer3_A3 CCI1B input	CCI1B			
DVSS	GND			
DVCC	VCC			

6.10.9 Hardware Multiplier (MPY)

The multiplication operation is supported by a dedicated peripheral module. The module performs operations with 32-, 24-, 16-, and 8-bit operands. The MPY module supports signed multiplication, unsigned multiplication, signed multiply-and-accumulate, and unsigned multiply-and-accumulate operations.

6.10.10 Backup Memory (BAKMEM)

The BAKMEM supports data retention during LPM3.5. This device provides up to 32 bytes that are retained during LPM3.5.

6.10.11 Real-Time Clock (RTC)

The RTC is a 16-bit modulo counter that is functional in AM, LPM0, LPM3, and LPM3.5. This module may periodically wake up the CPU from LPM0, LPM3, and LPM3.5 based on timing from a low-power clock source such as the XT1 and VLO clocks. In AM, SMCLK can drive the RTC to generate high-frequency timing events and interrupts. The RTC overflow events trigger:

- Timer0_A3 CCR1B
- ADC conversion trigger when ADCSHSx bits are set as 01b

Copyright © 2015–2019, Texas Instruments Incorporated

6.10.12 10-Bit Analog-to-Digital Converter (ADC)

The 10-bit ADC module supports fast 10-bit analog-to-digital conversions with single-ended input. The module implements a 10-bit SAR core, sample select control, reference generator and a conversion result buffer. A window comparator with lower and upper limits allows CPU-independent result monitoring with three window comparator interrupt flags.

The ADC supports 10 external inputs and 4 internal inputs (see Table 6-15).

Table 6-15. ADC Channel Connections

ADCINCHx	ADC CHANNELS	EXTERNAL PINOUT
0	A0/Veref+	P1.0
1	A1	P1.1
2	A2/Veref-	P1.2
3	A3	P1.3
4	A4 (1)	P1.4
5	A5	P1.5
6	A6	P1.6
7	A7	P1.7
8	A8	NA
9	A9	NA
10	Not used	N/A
11	Not used	N/A
12	On-chip temperature sensor	N/A
13	Reference voltage (1.5 V)	N/A
14	DVSS	N/A
15	DVCC	N/A

(1) When A4 is used, the PMM 1.2-V reference voltage can be output to this pin by setting the PMM control register. The 1.2-V voltage can be directly measured by A4 channel.

Software or a hardware trigger can start the analog-to-digital conversion. Table 6-16 lists the trigger sources that are available.

Table 6-16. ADC Trigger Signal Connections

ADCSHSx		TRIGGER SOURCE
BINARY	DECIMAL	
00	0	ADCSC bit (software trigger)
01	1	RTC event
10	2	TA1.1B
11	3	--

6.10.13 Embedded Emulation Module (EEM)

The EEM supports real-time in-system debugging. The EEM on these devices has the following features:

- Three hardware triggers or breakpoints on memory access
- One hardware trigger or breakpoint on CPU register write access
- Up to four hardware triggers that can be combined to form complex triggers or breakpoints
- One cycle counter
- Clock control on module level
- EEM version: S

6.11 Input/Output Diagrams

6.11.1 Port P1 Input/Output With Schmitt Trigger

Figure 6-1 shows the port diagram. Table 6-17 summarizes the selection of pin function.

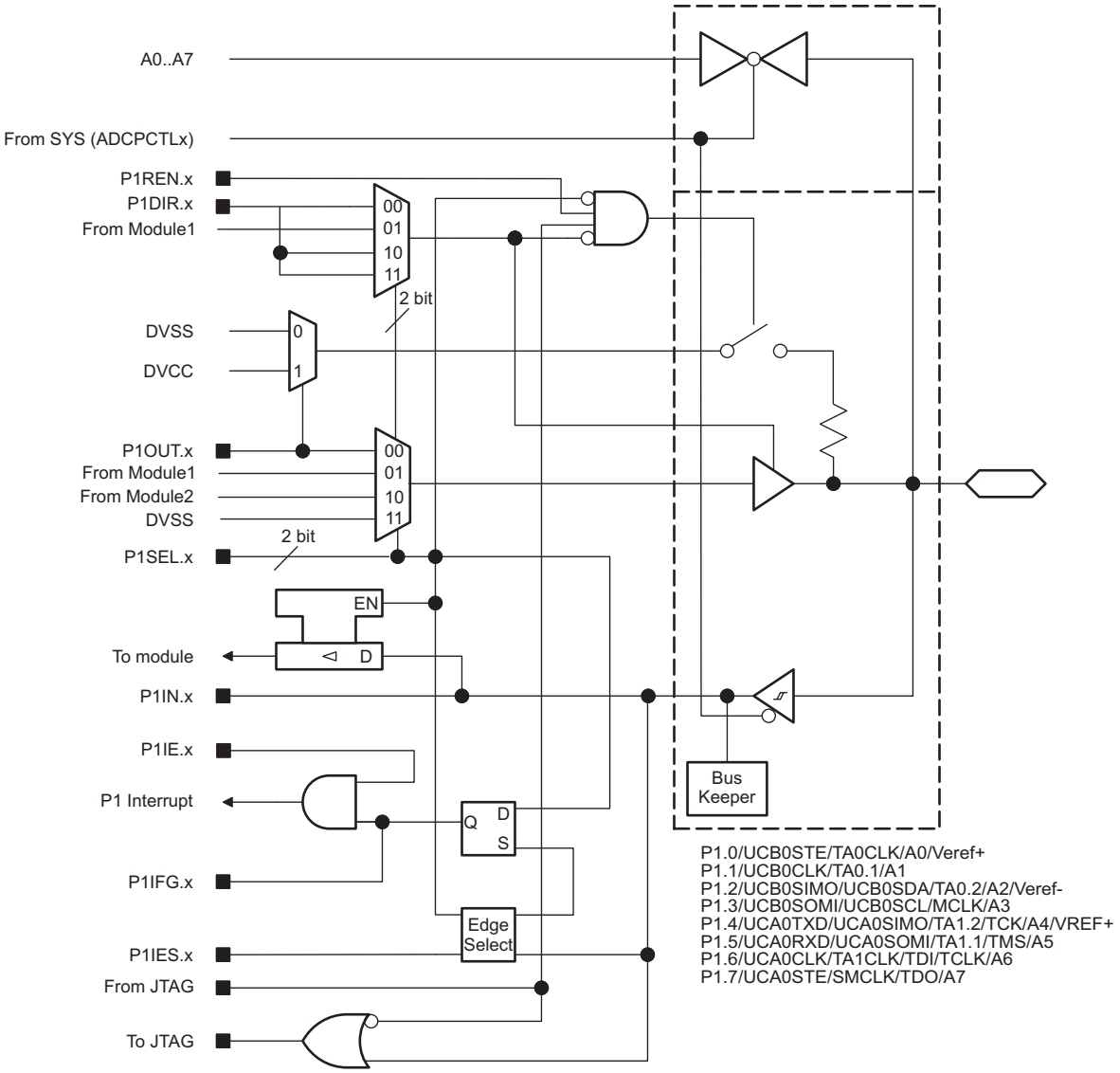

Figure 6-1. Port P1 (P1.0 to P1.7) Input/Output With Schmitt Trigger

Copyright © 2015–2019, Texas Instruments Incorporated

Table 6-17. Port P1 (P1.0 to P1.7) Pin Functions

PIN NAME (P1.x)	x	FUNCTION	CONTROL BITS AND SIGNALS[1]			
			P1DIR.x	P1SELx	ADCPCTLx[2]	JTAG
P1.0/UCB0STE/ TA0CLK/A0	0	P1.0 (I/O)	I: 0; O: 1	00	0	N/A
		UCB0STE	X	01	0	N/A
		TA0CLK	0	10	0	N/A
		A0/Veref+	X	X	1 (x = 0)	N/A
P1.1/UCB0CLK/TA0.1/ A1	1	P1.1 (I/O)	I: 0; O: 1	00	0	N/A
		UCB0CLK	X	01	0	N/A
		TA0.CCI1A	0	10	0	N/A
		TA0.1	1			
		A1	X	X	1 (x = 1)	N/A
P1.2/UCB0SIMO/ UCB0SDA/TA0.2/A2	2	P1.2 (I/O)	I: 0; O: 1	00	0	N/A
		UCB0SIMO/UCB0SDA	X	01	0	N/A
		TA0.CCI2A	0	10	0	N/A
		TA0.2	1			
		A2/Veref-	X	X	1 (x = 2)	N/A
P1.3/UCB0SOMI/ UCB0SCL/MCLK/A3	3	P1.3 (I/O)	I: 0; O: 1	00	0	N/A
		UCB0SOMI/UCB0SCL	X	01	0	N/A
		MCLK	1	10	0	N/A
		A3	X	X	1 (x = 3)	N/A
P1.4/UCA0TXD/ UCA0SIMO/TA1.2/TCK/ A4 /VREF+	4	P1.4 (I/O)	I: 0; O: 1	00	0	Disabled
		UCA0TXD/UCA0SIMO	X	01	0	Disabled
		TA1.CCI2A	0	10	0	Disabled
		TA1.2	1			
		A4, VREF+	X	X	1 (x = 4)	Disabled
		JTAG TCK	X	X	X	TCK
P1.5/UCA0RXD/ UCA0SOMI/TA1.1/TMS/ A5	5	P1.5 (I/O)	I: 0; O: 1	00	0	Disabled
		UCA0RXD/UCA0SOMI	X	01	0	Disabled
		TA1.CCI1A	0	10	0	Disabled
		TA1.1	1			
		A5	X	X	1 (x = 5)	Disabled
		JTAG TMS	X	X	X	TMS
P1.6/UCA0CLK/ TA1CLK/TDI/TCLK/A6	6	P1.6 (I/O)	I: 0; O: 1	00	0	Disabled
		UCA0CLK	X	01		Disabled
		TA1CLK	0	10	0	Disabled
		A6	X	X	1 (x = 6)	Disabled
		JTAG TDI/TCLK	X	X	X	TDI/TCLK
P1.7/UCA0STE/SMCLK/ TDO/A7	7	P1.7 (I/O)	I: 0; O: 1	00	0	Disabled
		UCA0STE	X	01	0	Disabled
		SMCLK	1	10	0	Disabled
		A7	X	X	1 (x = 7)	Disabled
		JTAG TDO	X	X	X	TDO

(1) X = don't care
(2) Setting the ADCPCTLx bit in SYSCFG2 register disables both the output driver and input Schmitt trigger to prevent leakage when analog signals are applied.

6.11.2 Port P2 (P2.0 to P2.2) Input/Output With Schmitt Trigger

Figure 6-2 shows the port diagram. Table 6-18 summarizes the selection of pin function.

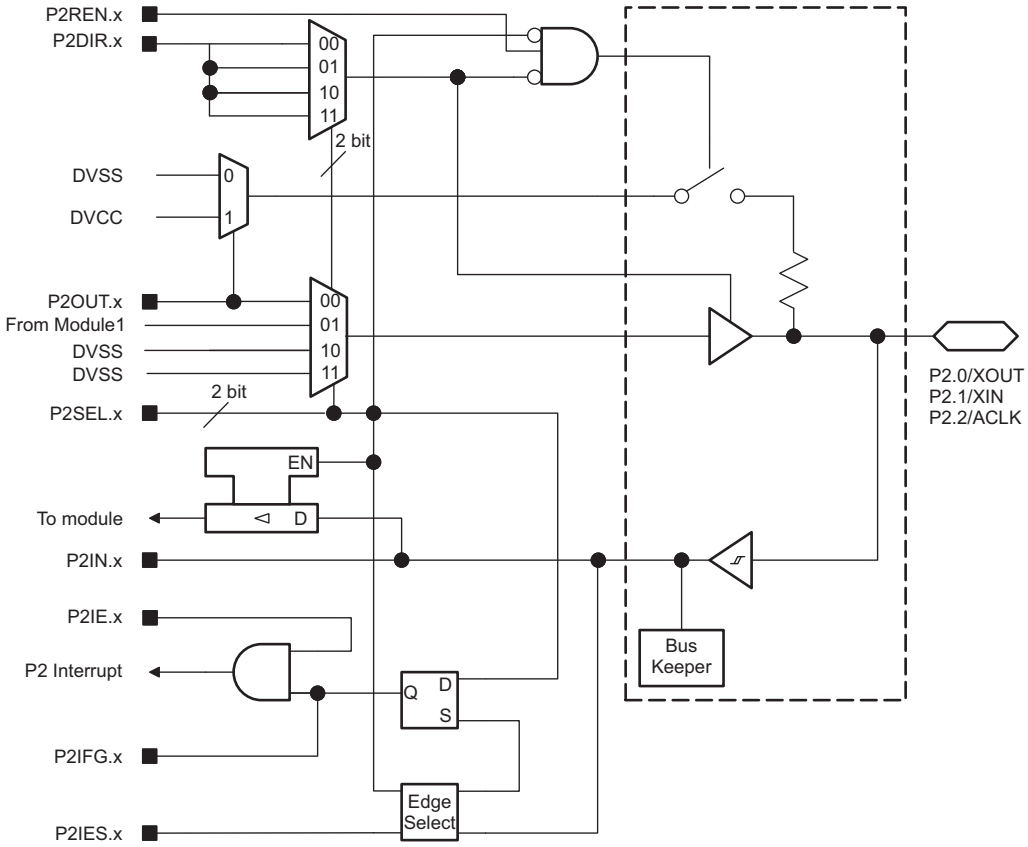

Figure 6-2. Port P2 (P2.0 to P2.2) Input/Output With Schmitt Trigger

Table 6-18. Port P2 (P2.0 to P2.2) Pin Functions

PIN NAME (P2.x)	x	FUNCTION	CONTROL BITS AND SIGNALS(1)	
			P2DIR.x	P2SELx
P2.0/XOUT	0	P2.0 (I/O)	I: 0; O: 1	00
		XOUT	X	01
P2.1/XIN	1	P2.1 (I/O)	I: 0; O: 1	00
		XIN	X	01
P2.2/ACLK	2	P2.2 (I/O)	I: 0; O: 1	00
		ACLK	1	10

(1) X = don't care

Copyright © 2015–2019, Texas Instruments Incorporated

6.11.3 Port P2 (P2.3 to P2.7) Input/Output With Schmitt Trigger

Figure 6-3 shows the port diagram. Table 6-19 summarizes the selection of pin function.

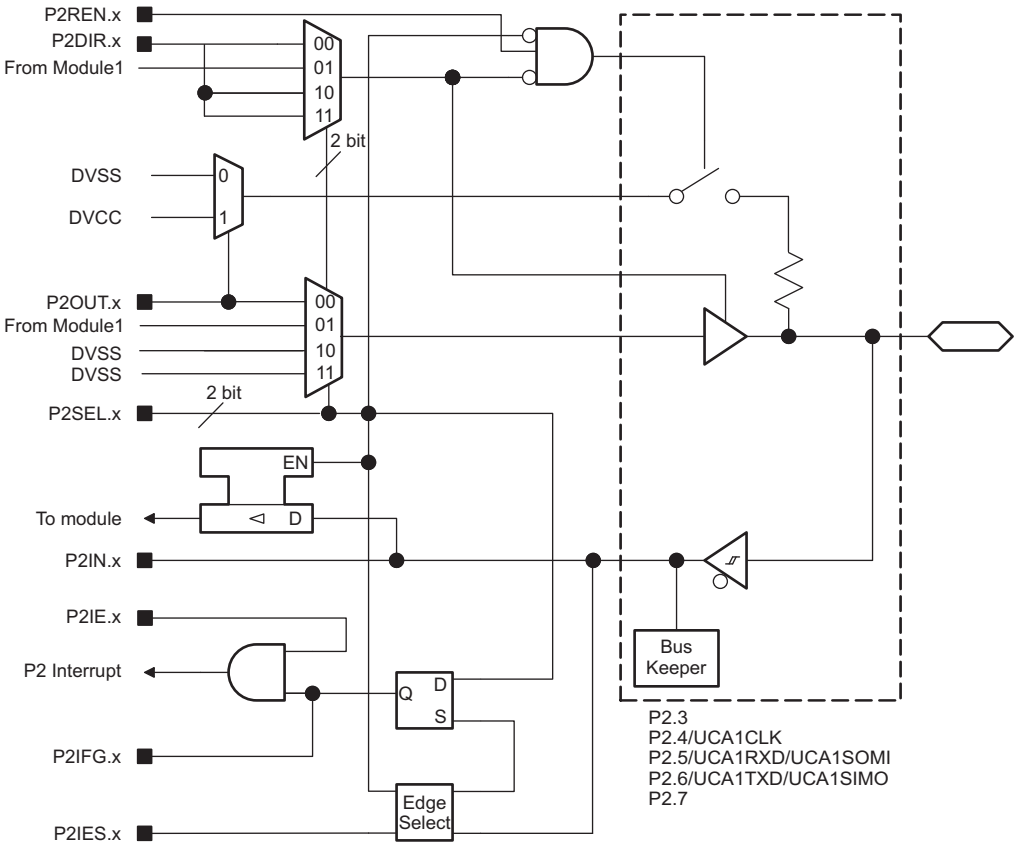

Figure 6-3. Port P2 (P2.3 to P2.7) Input/Output With Schmitt Trigger

Table 6-19. Port P2 (P2.3 to P2.7) Pin Functions

PIN NAME (P2.x)	x	FUNCTION	CONTROL BITS AND SIGNALS[1]		
			P2DIR.x	P2SELx	ANALOG FUNCTION
P2.3	3	P2.3 (I/O)	I: 0; O: 1	00	0
P2.4/UCA1CLK	4	P2.4 (I/O)	I: 0; O: 1	00	0
		UCA1CLK	X	01	0
P2.5/UCA1RXD/ UCA1SOMI	5	P2.5 (I/O)	I: 0; O: 1	00	0
		UCA1RXD/UCA1SOMI	X	01	0
P2.6/UCA1TXD/ UCA1SIMO	6	P2.6 (I/O)	I: 0; O: 1	00	0
		UCA1TXD/'UCA1SIMO	X	01	0
P2.7	7	P2.7 (I/O)	I: 0; O: 1	0	0

(1) X = don't care

Copyright © 2015–2019, Texas Instruments Incorporated

6.11.4 Port P3 (P3.0 to P3.2) Input/Output With Schmitt Trigger

Figure 6-4 shows the port diagram. Table 6-20 summarizes the selection of pin function.

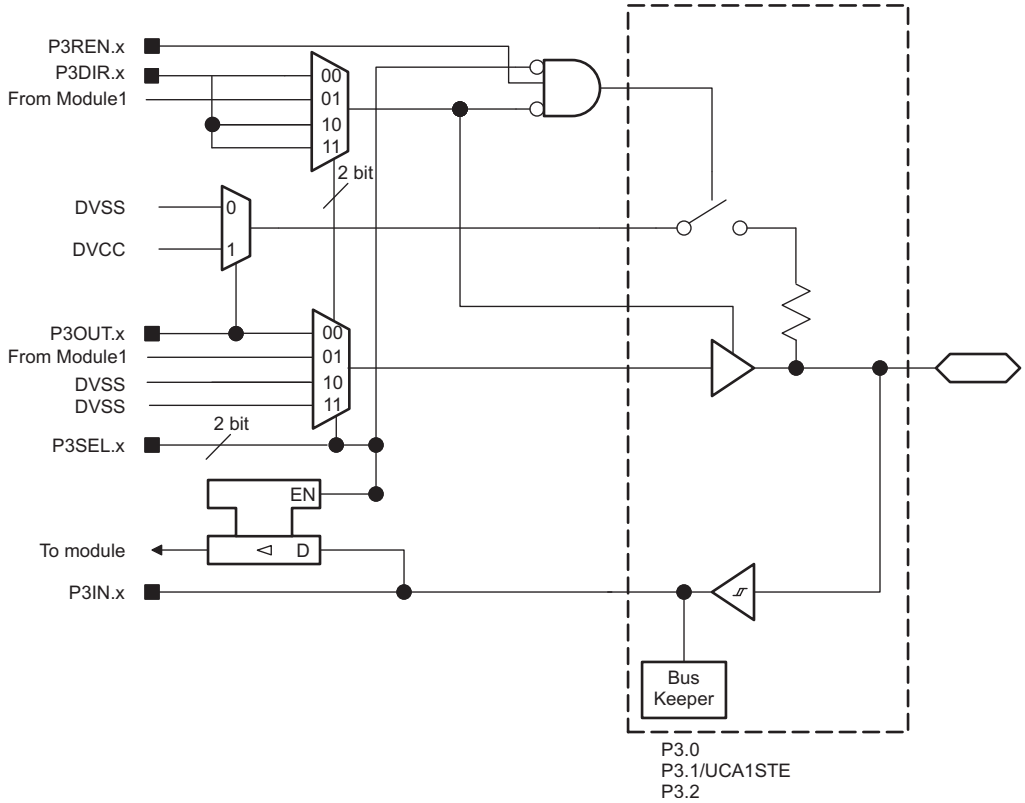

Figure 6-4. Port P3 (P3.0 to P3.2) Input/Output With Schmitt Trigger

Table 6-20. Port P3 (P3.0 to P3.2) Pin Functions

PIN NAME (P3.x)	x	FUNCTION	CONTROL BITS AND SIGNALS(1)	
			P3DIR.x	P3SEL.x
P3.0	0	P3.0 (I/O)	I: 0; O: 1	00
P3.1/UCA1STE	1	P3.1 (I/O)	I: 0; O: 1	00
		UCA1STE	X	01
P3.2	2	P3.2 (I/O)	I: 0; O: 1	00

(1) X = don't care

6.12 Device Descriptors

Table 6-21 lists the Device IDs of the devices. Table 6-22 lists the contents of the device descriptor tag-length-value (TLV) structure for the devices.

Table 6-21. Device IDs

DEVICE	DEVICE ID	
	1A05h	1A04h
MSP430FR2433	82h	40h

Table 6-22. Device Descriptors

DESCRIPTION		MSP430FR2433	
		ADDRESS	VALUE
Information Block	Info length	1A00h	06h
	CRC length	1A01h	06h
	CRC value(1)	1A02h	Per unit
		1A03h	Per unit
	Device ID	1A04h	See Table 6-21.
		1A05h	
	Hardware revision	1A06h	Per unit
	Firmware revision	1A07h	Per unit
Die Record	Die record tag	1A08h	08h
	Die record length	1A09h	0Ah
	Lot wafer ID	1A0Ah	Per unit
		1A0Bh	Per unit
		1A0Ch	Per unit
		1A0Dh	Per unit
	Die X position	1A0Eh	Per unit
		1A0Fh	Per unit
	Die Y position	1A10h	Per unit
		1A11h	Per unit
	Test result	1A12h	Per unit
		1A13h	Per unit
ADC Calibration	ADC calibration tag	1A14h	Per unit
	ADC calibration length	1A15h	Per unit
	ADC gain factor	1A16h	Per unit
		1A17h	Per unit
	ADC offset	1A18h	Per unit
		1A19h	Per unit
	ADC 1.5-V reference temperature 30°C	1A1Ah	Per unit
		1A1Bh	Per unit
	ADC 1.5-V reference temperature 85°C	1A1Ch	Per unit
		1A1Dh	Per unit

(1) The CRC value covers the checksum from 0x1A04h to 0x1AF5h by applying the CRC-CCITT-16 polynomial of $x^{16} + x^{12} + x^5 + 1$.

Copyright © 2015–2019, Texas Instruments Incorporated

Table 6-22. Device Descriptors (continued)

DESCRIPTION		MSP430FR2433	
		ADDRESS	VALUE
Reference and DCO Calibration	Calibration tag	1A1Eh	12h
	Calibration length	1A1Fh	04h
	1.5-V reference factor	1A20h	Per unit
		1A21h	Per unit
	DCO tap setting for 16 MHz, temperature 30°C (2)	1A22h	Per unit
		1A23h	Per unit

(2) This value can be directly loaded into DCO bits in CSCTL0 registers to get accurate 16-MHz frequency at room temperature, especially when the MCU exits from LPM3 and below. TI suggests using the predivider to decrease the frequency if the temperature drift might result an overshoot beyond 16 MHz.

6.13 Memory

6.13.1 Memory Organization

Table 6-23 summarizes the memory map of the device.

Table 6-23. Memory Organization

	ACCESS	MSP430FR2433
Memory (FRAM) Main: interrupt vectors and signatures Main: code memory	Read/Write (Optional Write Protect) (1)	15KB FFFFh to FF80h FFFFh to C400h
RAM	Read/Write	4KB 2FFFh to 2000h
Information Memory (FRAM)	Read/Write (Optional Write Protect) (2)	512 bytes 19FFh to 1800h
Bootstrap loader (BSL1) Memory (ROM)	Read only	2KB 17FFh to 1000h
Bootstrap loader (BSL2) Memory (ROM)	Read only	1KB FFFFFh to FFC00h
Peripherals	Read/Write	4KB 0FFFh to 0000h

(1) The Program FRAM can be write protected by setting the PFWP bit in the SYSCFG0 register. See the SYS chapter in the *MSP430FR4xx and MSP430FR2xx Family User's Guide* for more details.
(2) The Information FRAM can be write protected by setting the DFWP bit in the SYSCFG0 register. See the SYS chapter in the *MSP430FR4xx and MSP430FR2xx Family User's Guide* for more details.

6.13.2 Peripheral File Map

Table 6-24 lists the available peripherals and the register base address for each. Table 6-25 to Table 6-44 list the registers and address offsets for each peripheral.

Table 6-24. Peripherals Summary

MODULE NAME	BASE ADDRESS	SIZE
Special Functions (See Table 6-25)	0100h	0010h
PMM (See Table 6-26)	0120h	0020h
SYS (See Table 6-27)	0140h	0040h
CS (See Table 6-28)	0180h	0020h
FRAM (See Table 6-29)	01A0h	0010h
CRC (See Table 6-30)	01C0h	0008h
WDT (See Table 6-31)	01CCh	0002h
Port P1, P2 (See Table 6-32)	0200h	0020h
Port P3 (See Table 6-33)	0220h	0020h
RTC (See Table 6-34)	0300h	0010h
Timer0_A3 (See Table 6-35)	0380h	0030h
Timer1_A3 (See Table 6-36)	03C0h	0030h
Timer2_A2 (See Table 6-37)	0400h	0030h
Timer3_A2 (See Table 6-38)	0440h	0030h
MPY32 (See Table 6-39)	04C0h	0030h
eUSCI_A0 (See Table 6-40)	0500h	0020h
eUSCI_A1 (See Table 6-41)	0520h	0020h
eUSCI_B0 (See Table 6-42)	0540h	0030h
Backup Memory (See Table 6-43)	0660h	0020h
ADC (See Table 6-44)	0700h	0040h

Table 6-25. Special Function Registers (Base Address: 0100h)

REGISTER DESCRIPTION	ACRONYM	OFFSET
SFR interrupt enable	SFRIE1	00h
SFR interrupt flag	SFRIFG1	02h
SFR reset pin control	SFRRPCR	04h

Table 6-26. PMM Registers (Base Address: 0120h)

REGISTER DESCRIPTION	ACRONYM	OFFSET
PMM control 0	PMMCTL0	00h
PMM control 1	PMMCTL1	02h
PMM control 2	PMMCTL2	04h
PMM interrupt flags	PMMIFG	0Ah
PM5 control 0	PM5CTL0	10h

Copyright © 2015–2019, Texas Instruments Incorporated

Table 6-27. SYS Registers (Base Address: 0140h)

REGISTER DESCRIPTION	ACRONYM	OFFSET
System control	SYSCTL	00h
Bootloader configuration area	SYSBSLC	02h
JTAG mailbox control	SYSJMBC	06h
JTAG mailbox input 0	SYSJMBI0	08h
JTAG mailbox input 1	SYSJMBI1	0Ah
JTAG mailbox output 0	SYSJMBO0	0Ch
JTAG mailbox output 1	SYSJMBO1	0Eh
Bus error vector generator	SYSBERRIV	18h
User NMI vector generator	SYSUNIV	1Ah
System NMI vector generator	SYSSNIV	1Ch
Reset vector generator	SYSRSTIV	1Eh
System configuration 0	SYSCFG0	20h
System configuration 1	SYSCFG1	22h
System configuration 2	SYSCFG2	24h

Table 6-28. CS Registers (Base Address: 0180h)

REGISTER DESCRIPTION	ACRONYM	OFFSET
CS control 0	CSCTL0	00h
CS control 1	CSCTL1	02h
CS control 2	CSCTL2	04h
CS control 3	CSCTL3	06h
CS control 4	CSCTL4	08h
CS control 5	CSCTL5	0Ah
CS control 6	CSCTL6	0Ch
CS control 7	CSCTL7	0Eh
CS control 8	CSCTL8	10h

Table 6-29. FRAM Registers (Base Address: 01A0h)

REGISTER DESCRIPTION	ACRONYM	OFFSET
FRAM control 0	FRCTL0	00h
General control 0	GCCTL0	04h
General control 1	GCCTL1	06h

Table 6-30. CRC Registers (Base Address: 01C0h)

REGISTER DESCRIPTION	ACRONYM	OFFSET
CRC data input	CRC16DI	00h
CRC data input reverse byte	CRCDIRB	02h
CRC initialization and result	CRCINIRES	04h
CRC result reverse byte	CRCRESR	06h

Table 6-31. WDT Registers (Base Address: 01CCh)

REGISTER DESCRIPTION	ACRONYM	OFFSET
Watchdog timer control	WDTCTL	00h

Table 6-32. Port P1, P2 Registers (Base Address: 0200h)

REGISTER DESCRIPTION	ACRONYM	OFFSET
Port P1 input	P1IN	00h
Port P1 output	P1OUT	02h
Port P1 direction	P1DIR	04h
Port P1 pulling enable	P1REN	06h
Port P1 selection 0	P1SEL0	0Ah
Port P1 selection 1	P1SEL1	0Ch
Port P1 interrupt vector word	P1IV	0Eh
Port P1 complement selection	P1SELC	16h
Port P1 interrupt edge select	P1IES	18h
Port P1 interrupt enable	P1IE	1Ah
Port P1 interrupt flag	P1IFG	1Ch
Port P2 input	P2IN	01h
Port P2 output	P2OUT	03h
Port P2 direction	P2DIR	05h
Port P2 pulling enable	P2REN	07h
Port P2 selection 0	P2SEL0	0Bh
Port P2 selection 1	P2SEL1	0Dh
Port P2 interrupt vector word	P2IV	1Eh
Port P2 complement selection	P2SELC	17h
Port P2 interrupt edge select	P2IES	19h
Port P2 interrupt enable	P2IE	1Bh
Port P2 interrupt flag	P2IFG	1Dh

Table 6-33. Port P3 Registers (Base Address: 0220h)

REGISTER DESCRIPTION	ACRONYM	OFFSET
Port P3 input	P3IN	00h
Port P3 output	P3OUT	02h
Port P3 direction	P3DIR	04h
Port P3 pulling enable	P3REN	06h
Port P3 selection 0	P3SEL0	0Ah
Port P3 selection 1	P3SEL1	0
Port P3 complement selection	P3SELC	16h

Table 6-34. RTC Registers (Base Address: 0300h)

REGISTER DESCRIPTION	ACRONYM	OFFSET
RTC control	RTCCTL	00h
RTC interrupt vector	RTCIV	04h
RTC modulo	RTCMOD	08h
RTC counter	RTCCNT	0Ch

Copyright © 2015–2019, Texas Instruments Incorporated

Table 6-35. Timer0_A3 Registers (Base Address: 0380h)

REGISTER DESCRIPTION	ACRONYM	OFFSET
TA0 control	TA0CTL	00h
Capture/compare control 0	TA0CCTL0	02h
Capture/compare control 1	TA0CCTL1	04h
Capture/compare control 2	TA0CCTL2	06h
TA0 counter	TA0R	10h
Capture/compare 0	TA0CCR0	12h
Capture/compare 1	TA0CCR1	14h
Capture/compare 2	TA0CCR2	16h
TA0 expansion 0	TA0EX0	20h
TA0 interrupt vector	TA0IV	2Eh

Table 6-36. Timer1_A3 Registers (Base Address: 03C0h)

REGISTER DESCRIPTION	ACRONYM	OFFSET
TA1 control	TA1CTL	00h
Capture/compare control 0	TA1CCTL0	02h
Capture/compare control 1	TA1CCTL1	04h
Capture/compare control 2	TA1CCTL2	06h
TA1 counter	TA1R	10h
Capture/compare 0	TA1CCR0	12h
Capture/compare 1	TA1CCR1	14h
Capture/compare 2	TA1CCR2	16h
TA1 expansion 0	TA1EX0	20h
TA1 interrupt vector	TA1IV	2Eh

Table 6-37. Timer2_A2 Registers (Base Address: 0400h)

REGISTER DESCRIPTION	ACRONYM	OFFSET
TA2 control	TA2CTL	00h
Capture/compare control 0	TA2CCTL0	02h
Capture/compare control 1	TA2CCTL1	04h
TA2 counter	TA2R	10h
Capture/compare 0	TA2CCR0	12h
Capture/compare 1	TA2CCR1	14h
TA2 expansion 0	TA2EX0	20h
TA2 interrupt vector	TA2IV	2Eh

Table 6-38. Timer3_A2 Registers (Base Address: 0440h)

REGISTER DESCRIPTION	ACRONYM	OFFSET
TA3 control	TA3CTL	00h
Capture/compare control 0	TA3CCTL0	02h
Capture/compare control 1	TA3CCTL1	04h
TA3 counter	TA3R	10h
Capture/compare 0	TA3CCR0	12h
Capture/compare 1	TA3CCR1	14h
TA3 expansion 0	TA3EX0	20h
TA3 interrupt vector	TA3IV	2Eh

Copyright © 2015–2019, Texas Instruments Incorporated

Table 6-39. MPY32 Registers (Base Address: 04C0h)

REGISTER DESCRIPTION	ACRONYM	OFFSET
16-bit operand 1 – multiply	MPY	00h
16-bit operand 1 – signed multiply	MPYS	02h
16-bit operand 1 – multiply accumulate	MAC	04h
16-bit operand 1 – signed multiply accumulate	MACS	06h
16-bit operand 2	OP2	08h
16 × 16 result low word	RESLO	0Ah
16 × 16 result high word	RESHI	0Ch
16 × 16 sum extension	SUMEXT	0Eh
32-bit operand 1 – multiply low word	MPY32L	10h
32-bit operand 1 – multiply high word	MPY32H	12h
32-bit operand 1 – signed multiply low word	MPYS32L	14h
32-bit operand 1 – signed multiply high word	MPYS32H	16h
32-bit operand 1 – multiply accumulate low word	MAC32L	18h
32-bit operand 1 – multiply accumulate high word	MAC32H	1Ah
32-bit operand 1 – signed multiply accumulate low word	MACS32L	1Ch
32-bit operand 1 – signed multiply accumulate high word	MACS32H	1Eh
32-bit operand 2 – low word	OP2L	20h
32-bit operand 2 – high word	OP2H	22h
32 × 32 result 0 – least significant word	RES0	24h
32 × 32 result 1	RES1	26h
32 × 32 result 2	RES2	28h
32 × 32 result 3 – most significant word	RES3	2Ah
MPY32 control 0	MPY32CTL0	2Ch

Table 6-40. eUSCI_A0 Registers (Base Address: 0500h)

REGISTER DESCRIPTION	ACRONYM	OFFSET
eUSCI_A control word 0	UCA0CTLW0	00h
eUSCI_A control word 1	UCA0CTLW1	02h
eUSCI_A control rate 0	UCA0BR0	06h
eUSCI_A control rate 1	UCA0BR1	07h
eUSCI_A modulation control	UCA0MCTLW	08h
eUSCI_A status	UCA0STAT	0Ah
eUSCI_A receive buffer	UCA0RXBUF	0Ch
eUSCI_A transmit buffer	UCA0TXBUF	0Eh
eUSCI_A LIN control	UCA0ABCTL	10h
eUSCI_A IrDA transmit control	lUCA0IRTCTL	12h
eUSCI_A IrDA receive control	IUCA0IRRCTL	13h
eUSCI_A interrupt enable	UCA0IE	1Ah
eUSCI_A interrupt flags	UCA0IFG	1Ch
eUSCI_A interrupt vector word	UCA0IV	1Eh

Copyright © 2015–2019, Texas Instruments Incorporated

Table 6-41. eUSCI_A1 Registers (Base Address: 0520h)

REGISTER DESCRIPTION	ACRONYM	OFFSET
eUSCI_A control word 0	UCA1CTLW0	00h
eUSCI_A control word 1	UCA1CTLW1	02h
eUSCI_A control rate 0	UCA1BR0	06h
eUSCI_A control rate 1	UCA1BR1	07h
eUSCI_A modulation control	UCA1MCTLW	08h
eUSCI_A status	UCA1STAT	0Ah
eUSCI_A receive buffer	UCA1RXBUF	0Ch
eUSCI_A transmit buffer	UCA1TXBUF	0Eh
eUSCI_A LIN control	UCA1ABCTL	10h
eUSCI_A IrDA transmit control	lUCA1IRTCTL	12h
eUSCI_A IrDA receive control	lUCA1IRRCTL	13h
eUSCI_A interrupt enable	UCA1IE	1Ah
eUSCI_A interrupt flags	UCA1IFG	1Ch
eUSCI_A interrupt vector word	UCA1IV	1Eh

Table 6-42. eUSCI_B0 Registers (Base Address: 0540h)

REGISTER DESCRIPTION	ACRONYM	OFFSET
eUSCI_B control word 0	UCB0CTLW0	00h
eUSCI_B control word 1	UCB0CTLW1	02h
eUSCI_B bit rate 0	UCB0BR0	06h
eUSCI_B bit rate 1	UCB0BR1	07h
eUSCI_B status word	UCB0STATW	08h
eUSCI_B byte counter threshold	UCB0TBCNT	0Ah
eUSCI_B receive buffer	UCB0RXBUF	0Ch
eUSCI_B transmit buffer	UCB0TXBUF	0Eh
eUSCI_B I2C own address 0	UCB0I2COA0	14h
eUSCI_B I2C own address 1	UCB0I2COA1	16h
eUSCI_B I2C own address 2	UCB0I2COA2	18h
eUSCI_B I2C own address 3	UCB0I2COA3	1Ah
eUSCI_B receive address	UCB0ADDRX	1Ch
eUSCI_B address mask	UCB0ADDMASK	1Eh
eUSCI_B I2C slave address	UCB0I2CSA	20h
eUSCI_B interrupt enable	UCB0IE	2Ah
eUSCI_B interrupt flags	UCB0IFG	2Ch
eUSCI_B interrupt vector word	UCB0IV	2Eh

Copyright © 2015–2019, Texas Instruments Incorporated

Table 6-43. Backup Memory Registers (Base Address: 0660h)

REGISTER DESCRIPTION	ACRONYM	OFFSET
Backup memory 0	BAKMEM0	00h
Backup memory 1	BAKMEM1	02h
Backup memory 2	BAKMEM2	04h
Backup memory 3	BAKMEM3	06h
Backup memory 4	BAKMEM4	08h
Backup memory 5	BAKMEM5	0Ah
Backup memory 6	BAKMEM6	0Ch
Backup memory 7	BAKMEM7	0Eh
Backup memory 8	BAKMEM8	10h
Backup memory 9	BAKMEM9	12h
Backup memory 10	BAKMEM10	14h
Backup memory 11	BAKMEM11	16h
Backup memory 12	BAKMEM12	18h
Backup memory 13	BAKMEM13	1Ah
Backup memory 14	BAKMEM14	1Ch
Backup memory 15	BAKMEM15	1Eh

Table 6-44. ADC Registers (Base Address: 0700h)

REGISTER DESCRIPTION	ACRONYM	OFFSET
ADC control 0	ADCCTL0	00h
ADC control 1	ADCCTL1	02h
ADC control 2	ADCCTL2	04h
ADC window comparator low threshold	ADCLO	06h
ADC window comparator high threshold	ADCHI	08h
ADC memory control 0	ADCMCTL0	0Ah
ADC conversion memory	ADCMEM0	12h
ADC interrupt enable	ADCIE	1Ah
ADC interrupt flags	ADCIFG	1Ch
ADC interrupt vector word	ADCIV	1Eh

Copyright © 2015–2019, Texas Instruments Incorporated

6.14 Identification

6.14.1 Revision Identification

The device revision information is included as part of the top-side marking on the device package. The device-specific errata sheet describes these markings (see Section 8.4).

The hardware revision is also stored in the Device Descriptor structure in the Information Block section. For details on this value, see the Hardware Revision entries in Table 6-22.

6.14.2 Device Identification

The device type can be identified from the top-side marking on the device package. The device-specific errata sheet describes these markings (see Section 8.4).

A device identification value is also stored in the Device Descriptor structure in the Information Block section. For details on this value, see the Device ID entries in Table 6-22.

6.14.3 JTAG Identification

Programming through the JTAG interface, including reading and identifying the JTAG ID, is described in *MSP430 Programming With the JTAG Interface*.

7 Applications, Implementation, and Layout

NOTE

Information in the following Applications section is not part of the TI component specification, and TI does not warrant its accuracy or completeness. TI's customers are responsible for determining suitability of components for their purposes. Customers should validate and test their design implementation to confirm system functionality.

7.1 Device Connection and Layout Fundamentals

This section discusses the recommended guidelines when designing with the MSP430 devices. These guidelines are to make sure that the device has proper connections for powering, programming, debugging, and optimum analog performance.

7.1.1 Power Supply Decoupling and Bulk Capacitors

TI recommends connecting a combination of a 10-µF and a 100-nF low-ESR ceramic decoupling capacitor to the DVCC and DVSS pins (see Figure 7-1). Higher-value capacitors may be used but can impact supply rail ramp-up time. Decoupling capacitors must be placed as close as possible to the pins that they decouple (within a few millimeters). Additionally, TI recommends separated grounds with a single-point connection for better noise isolation from digital-to-analog circuits on the board and to achieve high analog accuracy.

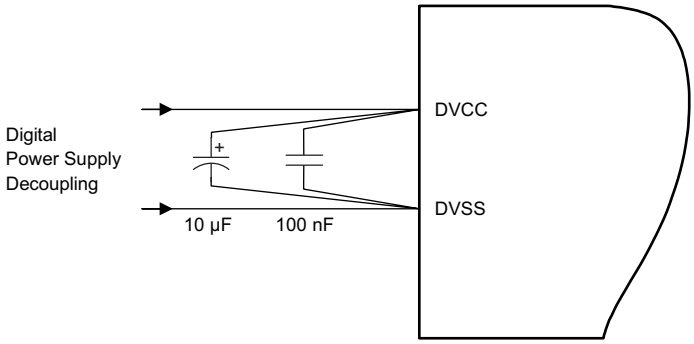

Figure 7-1. Power Supply Decoupling

7.1.2 External Oscillator

This device supports only a low-frequency crystal (32 kHz) on the XIN and XOUT pins. External bypass capacitors for the crystal oscillator pins are required.

It is also possible to apply digital clock signals to the XIN input pin that meet the specifications of the respective oscillator if the appropriate XT1BYPASS mode is selected. In this case, the associated XOUT pin can be used for other purposes. If the XIN and XOUT pins are not used, they must be terminated according to Section 4.6.

Figure 7-2 shows a typical connection diagram.

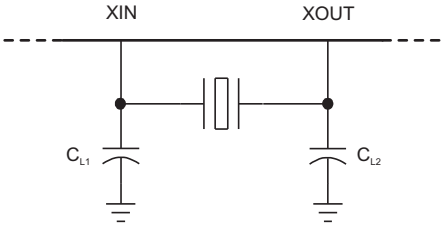

Figure 7-2. Typical Crystal Connection

Copyright © 2015–2019, Texas Instruments Incorporated

See *MSP430 32-kHz Crystal Oscillators* for more information on selecting, testing, and designing a crystal oscillator with the MSP430 devices.

7.1.3 JTAG

With the proper connections, the debugger and a hardware JTAG interface (such as the MSP-FET or MSP-FET430UIF) can be used to program and debug code on the target board. In addition, the connections also support the MSP-GANG production programmers, thus providing an easy way to program prototype boards, if desired. Figure 7-3 shows the connections between the 14-pin JTAG connector and the target device required to support in-system programming and debugging for 4-wire JTAG communication. Figure 7-4 shows the connections for 2-wire JTAG mode (Spy-Bi-Wire).

The connections for the MSP-FET and MSP-FET430UIF interface modules and the MSP-GANG are identical. Both can supply V_{CC} to the target board (through pin 2). In addition, the MSP-FET and MSP-FET430UIF interface modules and MSP-GANG have a V_{CC} sense feature that, if used, requires an alternate connection (pin 4 instead of pin 2). The V_{CC} sense feature detects the local V_{CC} present on the target board (that is, a battery or other local power supply) and adjusts the output signals accordingly. Figure 7-3 and Figure 7-4 show a jumper block that supports both scenarios of supplying V_{CC} to the target board. If this flexibility is not required, the desired V_{CC} connections may be hard-wired to eliminate the jumper block. Pins 2 and 4 must not be connected at the same time.

For additional design information regarding the JTAG interface, see the *MSP430 Hardware Tools User's Guide*.

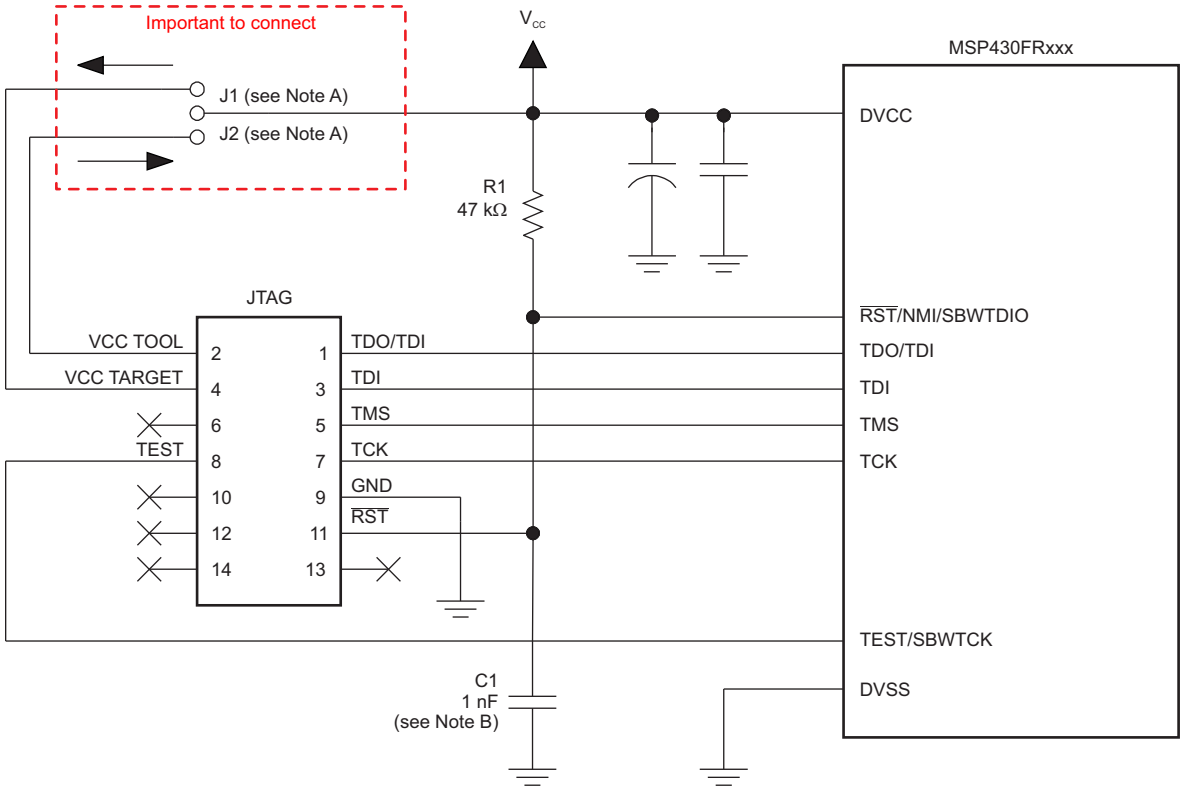

A. If a local target power supply is used, make connection J1. If power from the debug or programming adapter is used, make connection J2.

B. The upper limit for C1 is 1.1 nF when using current TI tools.

Figure 7-3. Signal Connections for 4-Wire JTAG Communication

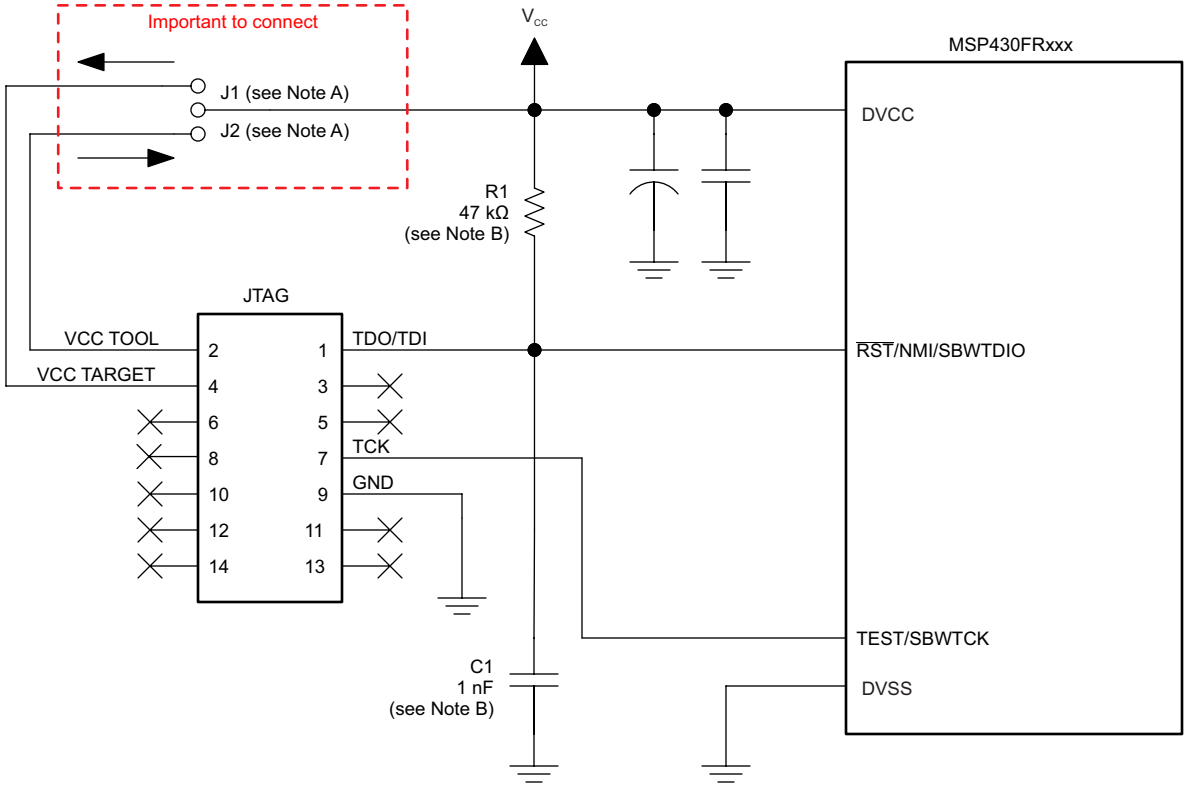

A. Make connection J1 if a local target power supply is used, or make connection J2 if the target is powered from the debug or programming adapter.

B. The device $\overline{\text{RST}}$/NMI/SBWTDIO pin is used in 2-wire mode for bidirectional communication with the device during JTAG access, and any capacitance that is attached to this signal may affect the ability to establish a connection with the device. The upper limit for C1 is 1.1 nF when using current TI tools.

Figure 7-4. Signal Connections for 2-Wire JTAG Communication (Spy-Bi-Wire)

7.1.4 Reset

The reset pin can be configured as a reset function (default) or as an NMI function in the Special Function Register (SFR), SFRRPCR.

In reset mode, the $\overline{\text{RST}}$/NMI pin is active low, and a pulse applied to this pin that meets the reset timing specifications generates a BOR-type device reset.

Setting SYSNMI causes the $\overline{\text{RST}}$/NMI pin to be configured as an external NMI source. The external NMI is edge sensitive, and its edge is selectable by SYSNMIIES. Setting the NMIIE enables the interrupt of the external NMI. When an external NMI event occurs, the NMIIFG is set.

The $\overline{\text{RST}}$/NMI pin can have either a pullup or pulldown that is enabled or not. SYSRSTUP selects either pullup or pulldown, and SYSRSTRE causes the pullup (default) or pulldown to be enabled (default) or not. If the $\overline{\text{RST}}$/NMI pin is unused, it is required either to select and enable the internal pullup or to connect an external 47-kΩ pullup resistor to the $\overline{\text{RST}}$/NMI pin with a 1.1-nF pulldown capacitor. The pulldown capacitor should not exceed 1.1 nF when using devices with Spy-Bi-Wire interface in Spy-Bi-Wire mode or in 4-wire JTAG mode with TI tools like FET interfaces or GANG programmers.

See the *MSP430FR4xx and MSP430FR2xx Family User's Guide* for more information on the referenced control registers and bits.

7.1.5 Unused Pins

For details on the connection of unused pins, see Section 4.6.

Copyright © 2015–2019, Texas Instruments Incorporated

7.1.6 General Layout Recommendations

- Proper grounding and short traces for external crystal to reduce parasitic capacitance. For recommended layout guidelines, see *MSP430 32-kHz Crystal Oscillators*.
- Proper bypass capacitors on DVCC and reference pins, if used.
- Avoid routing any high-frequency signal close to an analog signal line. For example, keep digital switching signals such as PWM or JTAG signals away from the oscillator circuit and ADC signals.
- Proper ESD level protection should be considered to protect the device from unintended high-voltage electrostatic discharge. For guidelines see *MSP430 System-Level ESD Considerations*.

7.1.7 Do's and Don'ts

During power up, power down, and device operation, DVCC must not exceed the limits specified in Section 5.1. Exceeding the specified limits may cause malfunction of the device including erroneous writes to RAM and FRAM.

7.2 Peripheral- and Interface-Specific Design Information

7.2.1 ADC Peripheral

7.2.1.1 Partial Schematic

Figure 7-5 shows the recommended decoupling circuit when an external voltage reference is used.

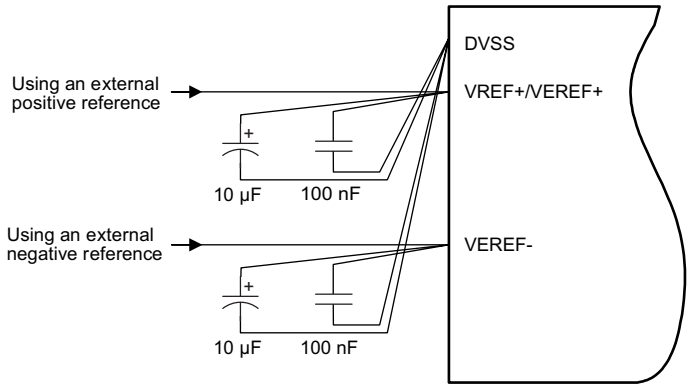

Figure 7-5. ADC Grounding and Noise Considerations

7.2.1.2 Design Requirements

As with any high-resolution ADC, appropriate PCB layout and grounding techniques must be followed to eliminate ground loops, unwanted parasitic effects, and noise.

Ground loops are formed when return current from the ADC flows through paths that are common with other analog or digital circuitry. If care is not taken, this current can generate small unwanted offset voltages that can add to or subtract from the reference or input voltages of the ADC. The general guidelines in Section 7.1.1 combined with the connections shown in Figure 7-5 prevent this.

Quickly switching digital signals and noisy power supply lines can corrupt the conversion results, so keep the ADC input trace shielded from those digital and power supply lines. Putting the MCU in low-power mode during the ADC conversion improves the ADC performance in a noisy environment. If the device includes the analog power pair inputs (AVCC and AVSS), TI recommends a noise-free design using separate analog and digital ground planes with a single-point connection to achieve high accuracy.

Figure 7-5 shows the recommended decoupling circuit when an external voltage reference is used. The internal reference module has a maximum drive current as described in the sections *ADC Pin Enable* and *1.2-V Reference Settings* of the *MSP430FR4xx and MSP430FR2xx Family User's Guide*.

The reference voltage must be a stable voltage for accurate measurements. The capacitor values that are selected in the general guidelines filter out the high- and low-frequency ripple before the reference voltage enters the device. In this case, the 10-µF capacitor buffers the reference pin and filters any low-frequency ripple. A bypass capacitor of 100 nF filters out any high-frequency noise.

7.2.1.3 Layout Guidelines

Components that are shown in the partial schematic (see Figure 7-5) should be placed as close as possible to the respective device pins to avoid long traces, because they add additional parasitic capacitance, inductance, and resistance on the signal.

Avoid routing analog input signals close to a high-frequency pin (for example, a high-frequency PWM), because the high-frequency switching can be coupled into the analog signal.

Copyright © 2015–2019, Texas Instruments Incorporated

8 Device and Documentation Support

8.1 Getting Started and Next Steps

For more information on the MSP low-power microcontrollers and the tools and libraries that are available to help with your development, visit the MSP430™ ultra-low-power sensing & measurement MCUs overview.

8.2 Device Nomenclature

To designate the stages in the product development cycle, TI assigns prefixes to the part numbers of all MSP MCU devices. Each MSP MCU commercial family member has one of two prefixes: MSP or XMS. These prefixes represent evolutionary stages of product development from engineering prototypes (XMS) through fully qualified production devices (MSP).

XMS – Experimental device that is not necessarily representative of the final device's electrical specifications

MSP – Fully qualified production device

XMS devices are shipped against the following disclaimer:

"Developmental product is intended for internal evaluation purposes."

MSP devices have been characterized fully, and the quality and reliability of the device have been demonstrated fully. TI's standard warranty applies.

Predictions show that prototype devices (XMS) have a greater failure rate than the standard production devices. TI recommends that these devices not be used in any production system because their expected end-use failure rate still is undefined. Only qualified production devices are to be used.

TI device nomenclature also includes a suffix with the device family name. This suffix indicates the temperature range, package type, and distribution format. Figure 8-1 provides a legend for reading the complete device name.

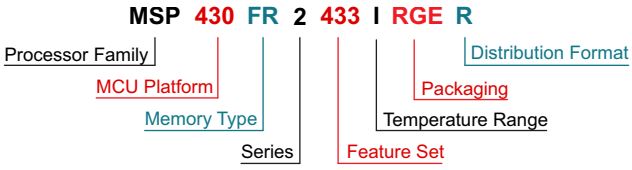

Processor Family	MSP = Mixed-Signal Processor XMS = Experimental Silicon	
MCU Platform	430 = MSP430 16-bit low-power platform	
Memory Type	FR = FRAM	
Series	2 = Up to 16 MHz without LCD	
Feature Set	**First and Second Digits:** **ADC Channels / eUSCIs / 16-bit Timers / I/Os** 43 = Up to 8 / 3 / 4 / Up to 19	**Third Digit:** **FRAM (KB) / SRAM (KB)** 3 = 16 / 4
Temperature Range	I = –40°C to 85°C	
Packaging	www.ti.com/packaging	
Distribution Format	T = Small reel R = Large reel No Marking = Tube or tray	

Figure 8-1. Device Nomenclature

8.3 Tools and Software

All MSP microcontrollers are supported by a wide variety of software and hardware development tools. Tools are available from TI and various third parties. See them all at Development Kits and Software for Low-Power MCUs.

Table 8-1 lists the debug features of the MSP430FR211x microcontrollers. See the *Code Composer Studio IDE for MSP430 MCUs User's Guide* for details on the available features.

Table 8-1. Hardware Debug Features

MSP430 ARCHITECTURE	4-WIRE JTAG	2-WIRE JTAG	BREAK-POINTS (N)	RANGE BREAK-POINTS	CLOCK CONTROL	STATE SEQUENCER	TRACE BUFFER	LPMx.5 DEBUGGING SUPPORT	EEM VERSION
MSP430Xv2	Yes	Yes	3	Yes	Yes	No	No	No	S

Design Kits and Evaluation Modules

MSP-FET and MSP-TS430RGE24A Evaluation Module Bundle

The MSP-FET is a powerful flash emulation tool to quickly begin application development on MSP430 microcontrollers. The MSP-FET includes a USB interface to program and debug the MSP430 in system through the JTAG interface or the pin-saving Spy-Bi-Wire (2-wire JTAG) protocol. The enclosed MSP-FET development tool supports development with all MSP430 devices.

Software

MSP430Ware Software

MSP430Ware is a collection of design resources that help users to effectively create and build MSP430 code. MSP430Ware includes a wide selection of highly abstracted software libraries – ranging from device and peripheral-specific libraries such as MSP430 Driver Library or USB, to application-specific libraries such as the graphics and capacitive touch libraries. In particular, the MSP430 Driver Library is an essential library to help software developers leverage convenient APIs to control low-level and intricate hardware peripherals, making the resulting code much easier to read and maintain.

MSP430FR243x, MSP430FR253x, MSP430FR263x Code Examples

C code examples are available for every MSP device that configures each integrated peripheral for various application needs.

MSP Driver Library

The abstracted API of MSP Driver Library provides easy-to-use function calls that free you from directly manipulating the bits and bytes of the MSP430 hardware. Thorough documentation is delivered through a helpful API Guide, which includes details on each function call and the recognized parameters. Developers can use Driver Library functions to write complete projects with minimal overhead.

MSP EnergyTrace™ Technology

EnergyTrace technology for MSP430 microcontrollers is an energy-based code analysis tool that measures and displays the energy profile of the application and helps to optimize it for ultra-low-power consumption.

ULP (Ultra-Low Power) Advisor

ULP Advisor™ software is a tool for guiding developers to write more efficient code to fully use the unique ultra-low-power features of MSP and MSP432 microcontrollers. Aimed at both experienced and new microcontroller developers, ULP Advisor checks your code against a thorough ULP checklist to help minimize the energy consumption of your application. At build time, ULP Advisor provides notifications and remarks to highlight areas of your code that can be further optimized for lower power.

Copyright © 2015–2019, Texas Instruments Incorporated

IEC60730 Software Package

The IEC60730 MSP430 software package was developed to help customers comply with IEC 60730-1:2010 (Automatic Electrical Controls for Household and Similar Use – Part 1: General Requirements) for up to Class B products, which includes home appliances, arc detectors, power converters, power tools, e-bikes, and many others. The IEC60730 MSP430 software package can be embedded in customer applications running on MSP430s to help simplify the customer's certification efforts of functional safety-compliant consumer devices to IEC 60730-1:2010 Class B.

Fixed Point Math Library for MSP

The MSP IQmath and Qmath libraries are collections of highly optimized and high-precision mathematical functions for C programmers to seamlessly port a floating-point algorithm into fixed-point code on MSP430 and MSP432 devices. These routines are typically used in computationally intensive real-time applications where optimal execution speed, high accuracy, and ultra-low energy are critical. By using the IQmath and Qmath libraries, it is possible to achieve execution speeds considerably faster and energy consumption considerably lower than equivalent code written using floating-point math.

Floating Point Math Library for MSP430

Continuing to innovate in the low-power and low-cost microcontroller space, TI provides MSPMATHLIB. Leveraging the intelligent peripherals of our devices, this floating-point math library of scalar functions that are up to 26 times faster than the standard MSP430 math functions. Mathlib is easy to integrate into your designs. This library is free and is integrated in both Code Composer Studio IDE and IAR Embedded Workbench IDE.

Development Tools

Code Composer Studio™ Integrated Development Environment for MSP Microcontrollers

Code Composer Studio (CCS) integrated development environment (IDE) supports all MSP microcontroller devices. CCS comprises a suite of embedded software utilities used to develop and debug embedded applications. It includes an optimizing C/C++ compiler, source code editor, project build environment, debugger, profiler, and many other features.

Command-Line Programmer

MSP Flasher is an open-source shell-based interface for programming MSP microcontrollers through a FET programmer or eZ430 using JTAG or Spy-Bi-Wire (SBW) communication. MSP Flasher can download binary files (.txt or .hex) directly to the MSP microcontroller without an IDE.

MSP MCU Programmer and Debugger

The MSP-FET is a powerful emulation development tool – often called a debug probe – that lets users quickly begin application development on MSP low-power microcontrollers (MCU). Creating MCU software usually requires downloading the resulting binary program to the MSP device for validation and debugging. The MSP-FET provides a debug communication pathway between a host computer and the target MSP. Furthermore, the MSP-FET also provides a backchannel UART connection between the computer's USB interface and the MSP UART. This affords the MSP programmer a convenient method for communicating serially between the MSP and a terminal running on the computer.

MSP-GANG Production Programmer

The MSP Gang Programmer can program up to eight identical MSP430 or MSP432 flash or FRAM devices at the same time. The MSP Gang Programmer connects to a host PC using a standard RS-232 or USB connection and provides flexible programming options that allow the user to fully customize the process. The MSP Gang Programmer is provided with an expansion board, called the Gang Splitter, that implements the interconnections between the MSP Gang Programmer and multiple target devices.

8.4 Documentation Support

The following documents describe the MSP430FR2433 MCUs. Copies of these documents are available on the Internet at www.ti.com.

Receiving Notification of Document Updates

To receive notification of documentation updates—including silicon errata—go to the product folder for your device on ti.com (for example, MSP430FR2433). In the upper-right corner, click the "Alert me" button. This registers you to receive a weekly digest of product information that has changed (if any). For change details, check the revision history of any revised document.

Errata

MSP430FR2433 Device Erratasheet

Describes the known exceptions to the functional specifications.

User's Guides

MSP430FR4xx and MSP430FR2xx Family User's Guide

Detailed information on the modules and peripherals available in this device family.

MSP430 FRAM Device Bootloader (BSL) User's Guide

The bootloader (BSL) provides a method to program memory during MSP430 MCU project development and updates. It can be activated by a utility that sends commands using a serial protocol. The BSL enables the user to control the activity of the MSP430 MCU and to exchange data using a personal computer or other device.

MSP430 Hardware Tools User's Guide

This manual describes the hardware of the TI MSP-FET430 Flash Emulation Tool (FET). The FET is the program development tool for the MSP430 ultra-low-power microcontroller.

Application Reports

MSP430 FRAM Technology – How To and Best Practices

FRAM is a nonvolatile memory technology that behaves similar to SRAM while enabling a whole host of new applications, but also changing the way firmware should be designed. This application report outlines the how to and best practices of using FRAM technology in MSP430 from an embedded software development perspective. It discusses how to implement a memory layout according to application-specific code, constant, data space requirements, and the use of FRAM to optimize application energy consumption.

VLO Calibration on the MSP430FR4xx and MSP430FR2xx Family

MSP430FR4xx and MSP430FR2xx (FR4xx/FR2xx) family microcontrollers (MCUs) provide various clock sources, including some high-speed high-accuracy clocks and some low-power low-system-cost clocks. Users can select the best balance of performance, power consumption, and system cost. The on-chip very low-frequency oscillator (VLO) is a clock source with 10-kHz typical frequency included in FR4xx/FR2xx family MCUs. The VLO is widely used in a range of applications because of its ultra-low power consumption.

Copyright © 2015–2019, Texas Instruments Incorporated

MSP430 32-kHz Crystal Oscillators

Selection of the right crystal, correct load circuit, and proper board layout are important for a stable crystal oscillator. This application report summarizes crystal oscillator function and explains the parameters to select the correct crystal for MSP430 ultra-low-power operation. In addition, hints and examples for correct board layout are given. The document also contains detailed information on the possible oscillator tests to ensure stable oscillator operation in mass production.

MSP430 System-Level ESD Considerations

System-level ESD has become increasingly demanding with silicon technology scaling towards lower voltages and the need for designing cost-effective and ultra-low-power components. This application report addresses different ESD topics to help board designers and OEMs understand and design robust system-level designs.

8.5 Community Resources

The following links connect to TI community resources. Linked contents are provided "AS IS" by the respective contributors. They do not constitute TI specifications and do not necessarily reflect TI's views; see TI's Terms of Use.

TI E2E™ Community
TI's Engineer-to-Engineer (E2E) Community. Created to foster collaboration among engineers. At e2e.ti.com, you can ask questions, share knowledge, explore ideas, and help solve problems with fellow engineers.

TI Embedded Processors Wiki
Texas Instruments Embedded Processors Wiki. Established to help developers get started with embedded processors from Texas Instruments and to foster innovation and growth of general knowledge about the hardware and software surrounding these devices.

8.6 Trademarks

LaunchPad, MSP430, MSP430Ware, Code Composer Studio, E2E, EnergyTrace, ULP Advisor are trademarks of Texas Instruments.
All other trademarks are the property of their respective owners.

8.7 Electrostatic Discharge Caution

This integrated circuit can be damaged by ESD. Texas Instruments recommends that all integrated circuits be handled with appropriate precautions. Failure to observe proper handling and installation procedures can cause damage.

ESD damage can range from subtle performance degradation to complete device failure. Precision integrated circuits may be more susceptible to damage because very small parametric changes could cause the device not to meet its published specifications.

8.8 Export Control Notice

Recipient agrees to not knowingly export or re-export, directly or indirectly, any product or technical data (as defined by the U.S., EU, and other Export Administration Regulations) including software, or any controlled product restricted by other applicable national regulations, received from disclosing party under nondisclosure obligations (if any), or any direct product of such technology, to any destination to which such export or re-export is restricted or prohibited by U.S. or other applicable laws, without obtaining prior authorization from U.S. Department of Commerce and other competent Government authorities to the extent required by those laws.

8.9 Glossary

TI Glossary This glossary lists and explains terms, acronyms, and definitions.

9 Mechanical, Packaging, and Orderable Information

The following pages include mechanical, packaging, and orderable information. This information is the most current data available for the designated devices. This data is subject to change without notice and revision of this document. For browser-based versions of this data sheet, see the left-hand navigation.

Copyright © 2015–2019, Texas Instruments Incorporated

PACKAGING INFORMATION

Orderable part number	Status (1)	Material type (2)	Package | Pins	Package qty | Carrier	RoHS (3)	Lead finish/ Ball material (4)	MSL rating/ Peak reflow (5)	Op temp (°C)	Part marking (6)
M430FR2433IRGERG4.A	Active	Production	VQFN (RGE) | 24	3000 | LARGE T&R	Yes	NIPDAU	Level-1-260C-UNLIM	-40 to 85	FR2433
MSP430FR2433IRGER	Active	Production	VQFN (RGE) | 24	3000 | LARGE T&R	Yes	NIPDAU | SN	Level-1-260C-UNLIM	-40 to 85	FR2433
MSP430FR2433IRGER.A	Active	Production	VQFN (RGE) | 24	3000 | LARGE T&R	Yes	NIPDAU	Level-1-260C-UNLIM	-40 to 85	FR2433
MSP430FR2433IRGET	Active	Production	VQFN (RGE) | 24	250 | SMALL T&R	Yes	NIPDAU | SN	Level-1-260C-UNLIM	-40 to 85	FR2433
MSP430FR2433IRGET.A	Active	Production	VQFN (RGE) | 24	250 | SMALL T&R	Yes	NIPDAU	Level-1-260C-UNLIM	-40 to 85	FR2433
MSP430FR2433IYQWR	Active	Production	DSBGA (YQW) | 24	3000 | LARGE T&R	Yes	SNAGCU	Level-1-260C-UNLIM	-40 to 85	430FR2433
MSP430FR2433IYQWR.A	Active	Production	DSBGA (YQW) | 24	3000 | LARGE T&R	Yes	SNAGCU	Level-1-260C-UNLIM	-40 to 85	430FR2433
MSP430FR2433IYQWT	Active	Production	DSBGA (YQW) | 24	250 | SMALL T&R	Yes	SNAGCU	Level-1-260C-UNLIM	-40 to 85	430FR2433
MSP430FR2433IYQWT.A	Active	Production	DSBGA (YQW) | 24	250 | SMALL T&R	Yes	SNAGCU	Level-1-260C-UNLIM	-40 to 85	430FR2433

(1) **Status:** For more details on status, see our product life cycle.

(2) **Material type:** When designated, preproduction parts are prototypes/experimental devices, and are not yet approved or released for full production. Testing and final process, including without limitation quality assurance, reliability performance testing, and/or process qualification, may not yet be complete, and this item is subject to further changes or possible discontinuation. If available for ordering, purchases will be subject to an additional waiver at checkout, and are intended for early internal evaluation purposes only. These items are sold without warranties of any kind.

(3) **RoHS values:** Yes, No, RoHS Exempt. See the TI RoHS Statement for additional information and value definition.

(4) **Lead finish/Ball material:** Parts may have multiple material finish options. Finish options are separated by a vertical ruled line. Lead finish/Ball material values may wrap to two lines if the finish value exceeds the maximum column width.

(5) **MSL rating/Peak reflow:** The moisture sensitivity level ratings and peak solder (reflow) temperatures. In the event that a part has multiple moisture sensitivity ratings, only the lowest level per JEDEC standards is shown. Refer to the shipping label for the actual reflow temperature that will be used to mount the part to the printed circuit board.

(6) **Part marking:** There may be an additional marking, which relates to the logo, the lot trace code information, or the environmental category of the part.

Multiple part markings will be inside parentheses. Only one part marking contained in parentheses and separated by a "~" will appear on a part. If a line is indented then it is a continuation of the previous line and the two combined represent the entire part marking for that device.

Important Information and Disclaimer: The information provided on this page represents TI's knowledge and belief as of the date that it is provided. TI bases its knowledge and belief on information provided by third parties, and makes no representation or warranty as to the accuracy of such information. Efforts are underway to better integrate information from third parties. TI has taken and continues to take reasonable steps to provide representative

and accurate information but may not have conducted destructive testing or chemical analysis on incoming materials and chemicals. TI and TI suppliers consider certain information to be proprietary, and thus CAS numbers and other limited information may not be available for release.

In no event shall TI's liability arising out of such information exceed the total purchase price of the TI part(s) at issue in this document sold by TI to Customer on an annual basis.

TAPE AND REEL INFORMATION

REEL DIMENSIONS

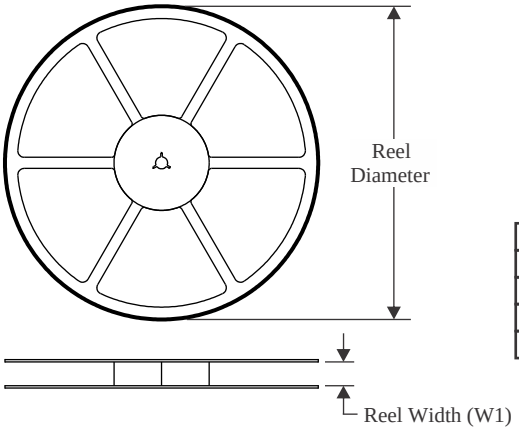

TAPE DIMENSIONS

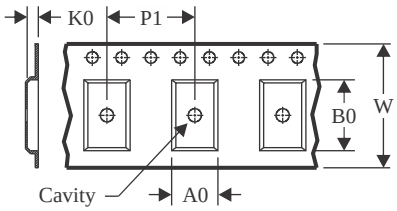

A0	Dimension designed to accommodate the component width
B0	Dimension designed to accommodate the component length
K0	Dimension designed to accommodate the component thickness
W	Overall width of the carrier tape
P1	Pitch between successive cavity centers

QUADRANT ASSIGNMENTS FOR PIN 1 ORIENTATION IN TAPE

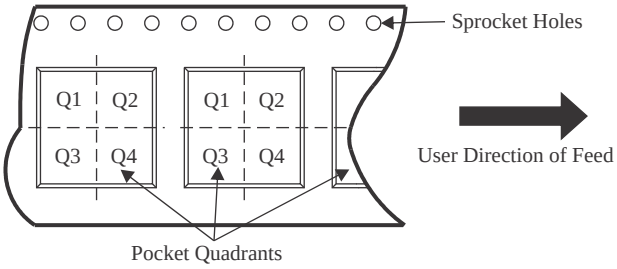

*All dimensions are nominal

Device	Package Type	Package Drawing	Pins	SPQ	Reel Diameter (mm)	Reel Width W1 (mm)	A0 (mm)	B0 (mm)	K0 (mm)	P1 (mm)	W (mm)	Pin1 Quadrant
MSP430FR2433IRGER	VQFN	RGE	24	3000	330.0	12.4	4.25	4.25	1.15	8.0	12.0	Q2
MSP430FR2433IRGET	VQFN	RGE	24	250	180.0	12.4	4.25	4.25	1.15	8.0	12.0	Q2
MSP430FR2433IYQWR	DSBGA	YQW	24	3000	180.0	8.4	2.38	2.4	0.8	4.0	8.0	Q1
MSP430FR2433IYQWT	DSBGA	YQW	24	250	180.0	8.4	2.38	2.4	0.8	4.0	8.0	Q1

TAPE AND REEL BOX DIMENSIONS

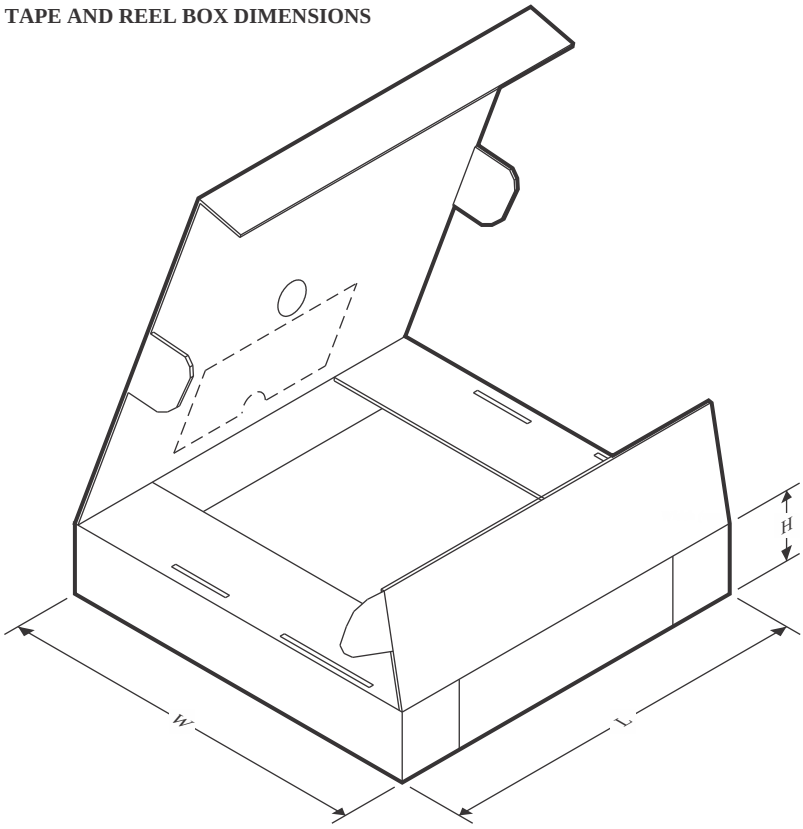

*All dimensions are nominal

Device	Package Type	Package Drawing	Pins	SPQ	Length (mm)	Width (mm)	Height (mm)
MSP430FR2433IRGER	VQFN	RGE	24	3000	346.0	346.0	33.0
MSP430FR2433IRGET	VQFN	RGE	24	250	182.0	182.0	20.0
MSP430FR2433IYQWR	DSBGA	YQW	24	3000	182.0	182.0	20.0
MSP430FR2433IYQWT	DSBGA	YQW	24	250	182.0	182.0	20.0

RGE 24 VQFN - 1 mm max height

PLASTIC QUAD FLATPACK - NO LEAD

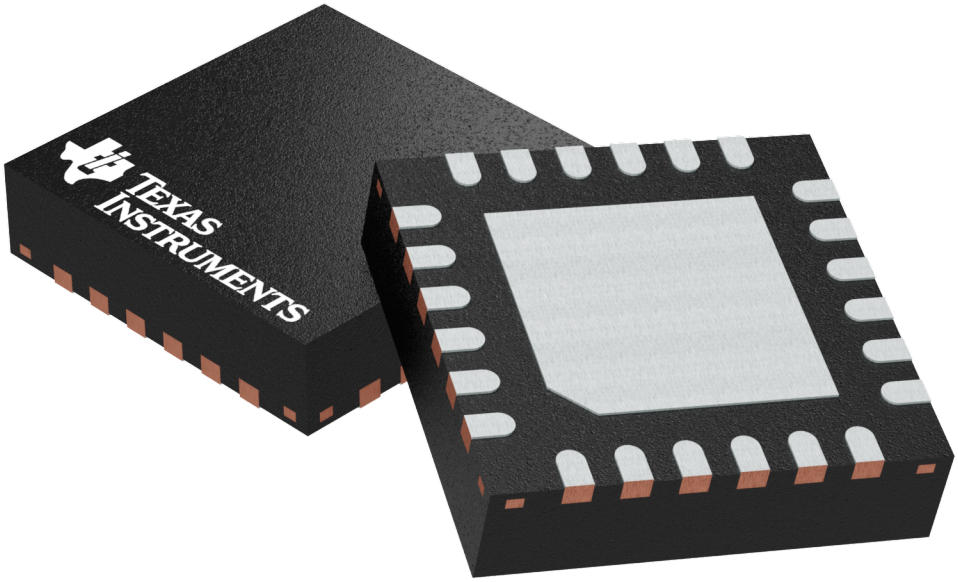

Images above are just a representation of the package family, actual package may vary.
Refer to the product data sheet for package details.

PLASTIC QUAD FLATPACK- NO LEAD

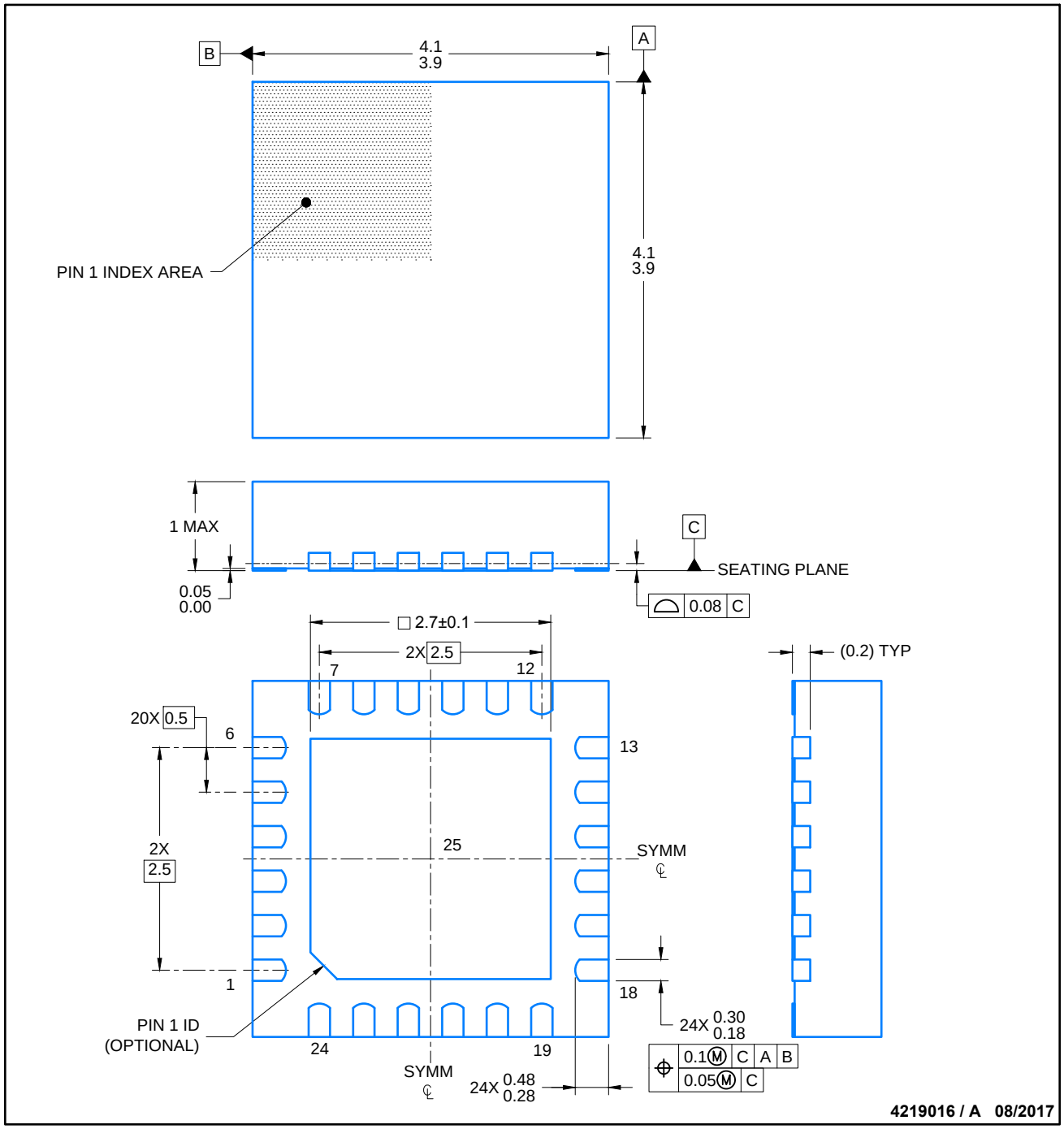

NOTES:

1. All linear dimensions are in millimeters. Any dimensions in parenthesis are for reference only. Dimensioning and tolerancing per ASME Y14.5M.
2. This drawing is subject to change without notice.
3. The package thermal pad must be soldered to the printed circuit board for thermal and mechanical performance.

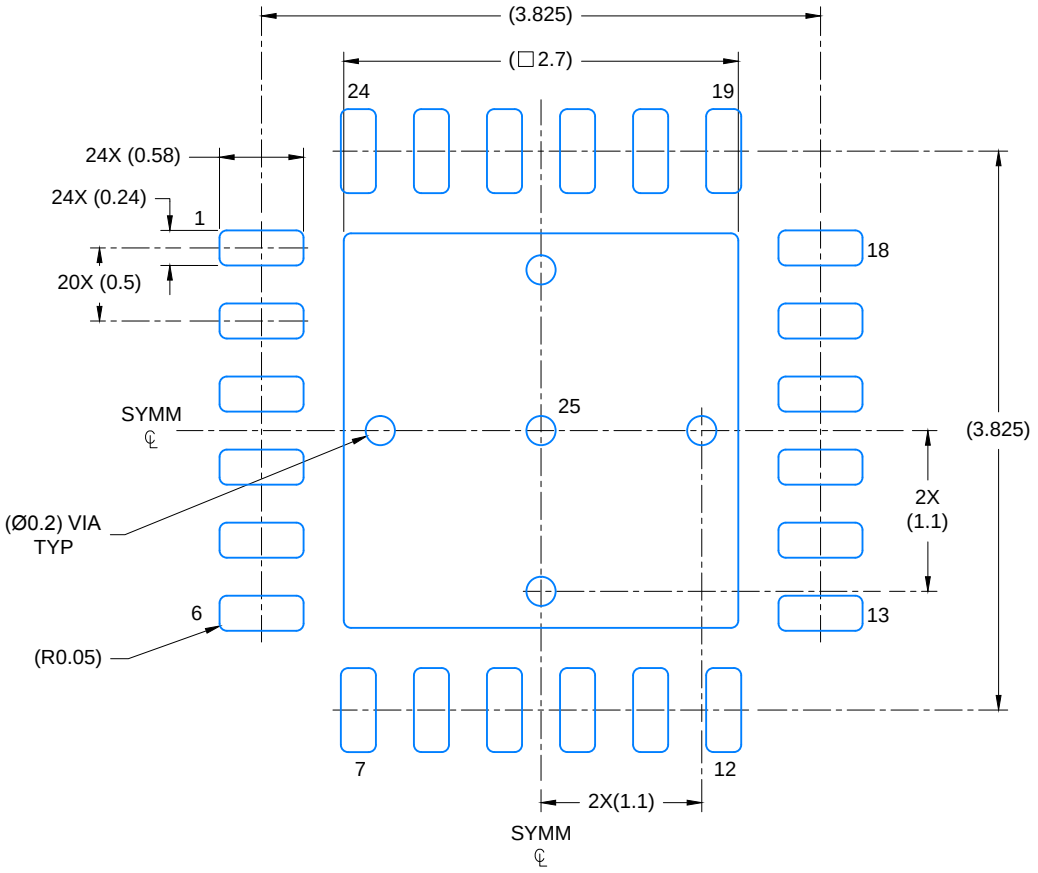

LAND PATTERN EXAMPLE

SCALE: 20X

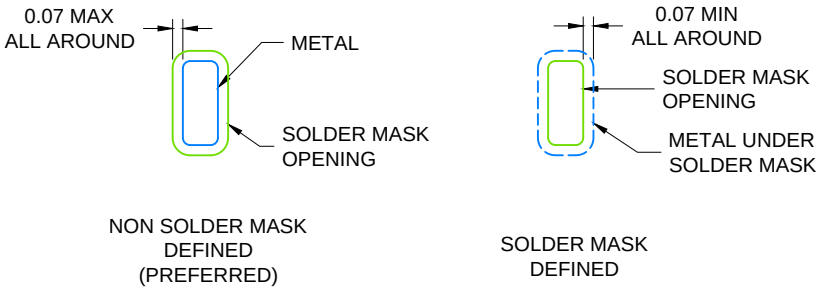

SOLDER MASK DETAILS

4219016 / A 08/2017

NOTES: (continued)

4. This package is designed to be soldered to a thermal pad on the board. For more information, see Texas Instruments literature number SLUA271 (www.ti.com/lit/slua271).
5. Solder mask tolerances between and around signal pads can vary based on board fabrication site.

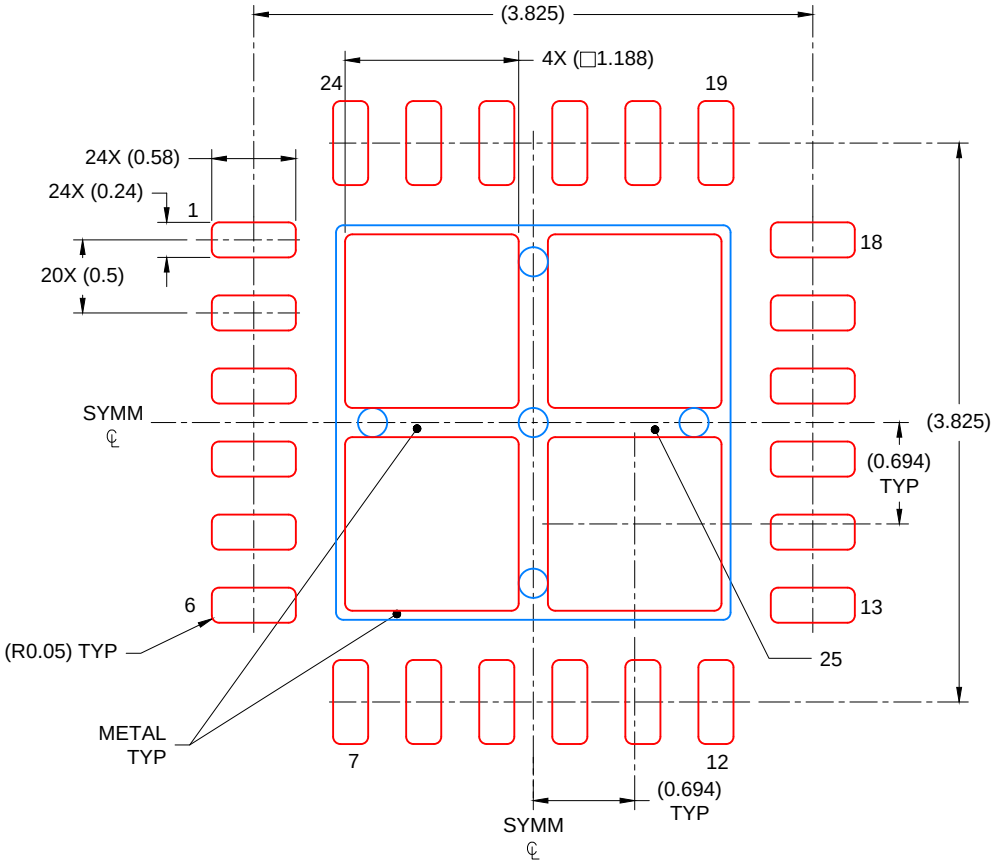

SOLDER PASTE EXAMPLE
BASED ON 0.125 mm THICK STENCIL

EXPOSED PAD
78% PRINTED COVERAGE BY AREA
SCALE: 20X

4219016 / A 08/2017

NOTES: (continued)

6. Laser cutting apertures with trapezoidal walls and rounded corners may offer better paste release. IPC-7525 may have alternate design recommendations..

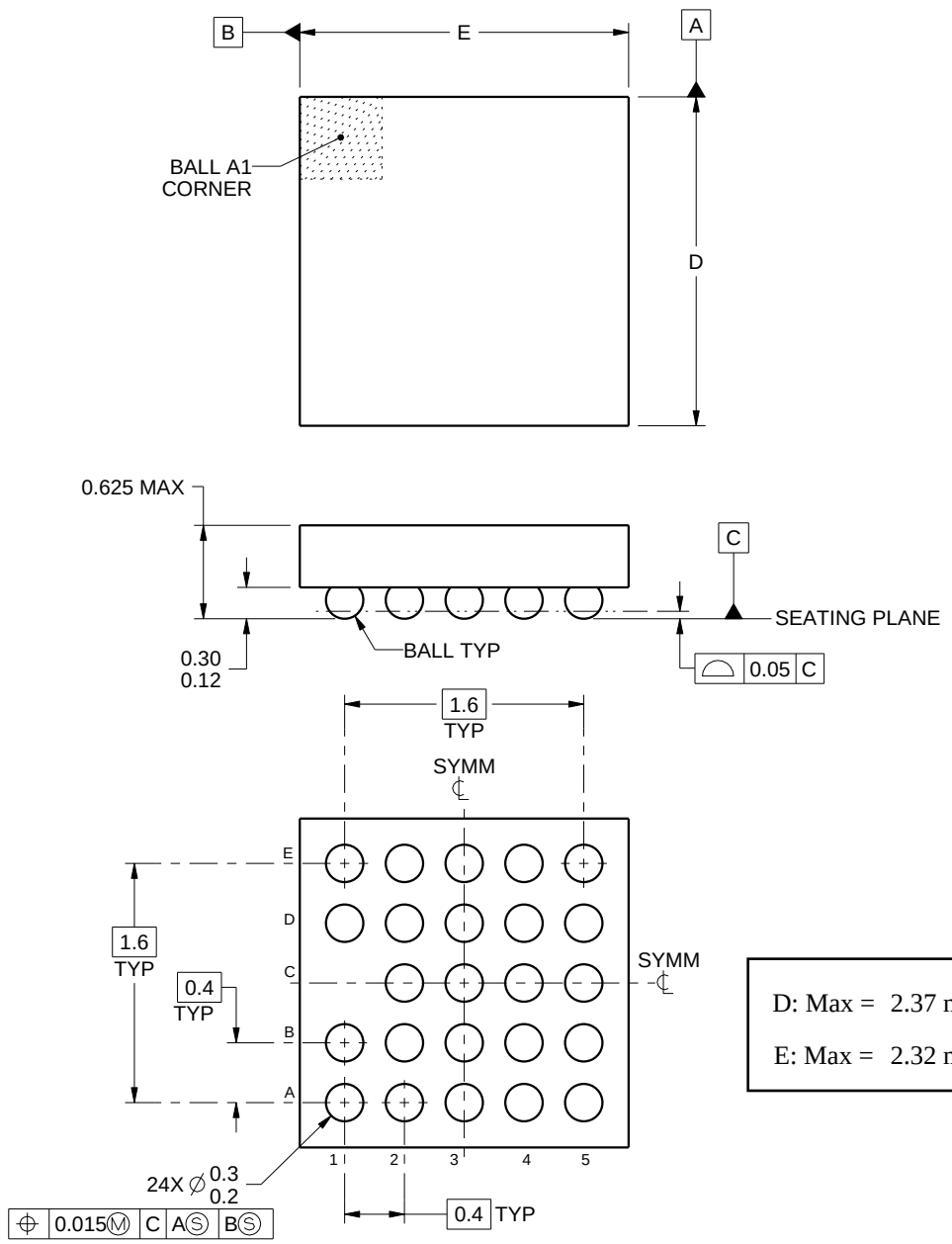

D: Max = 2.37 mm, Min = 2.31 mm

E: Max = 2.32 mm, Min = 2.26 mm

4221561/A 02/2016

NOTES:

1. All linear dimensions are in millimeters. Any dimensions in parenthesis are for reference only. Dimensioning and tolerancing per ASME Y14.5M.
2. This drawing is subject to change without notice.

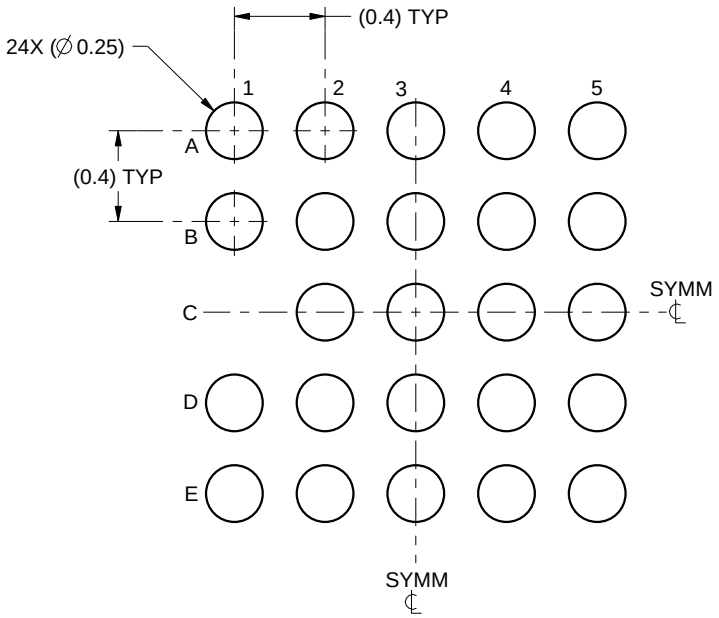

LAND PATTERN EXAMPLE
SCALE:30X

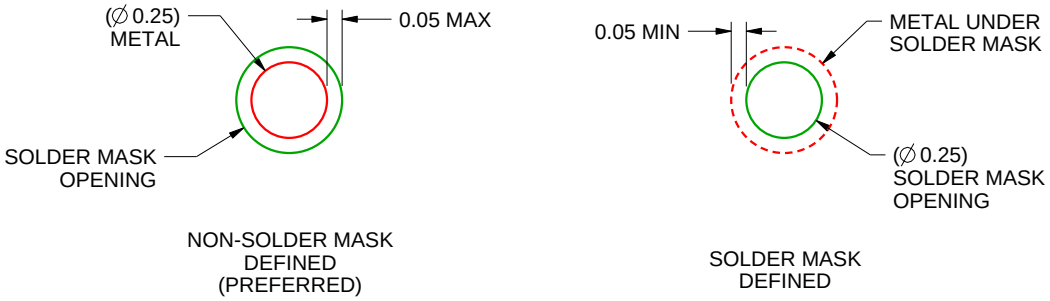

SOLDER MASK DETAILS
NOT TO SCALE

4221561/A 02/2016

NOTES: (continued)

3. Final dimensions may vary due to manufacturing tolerance considerations and also routing constraints.
   See Texas Instruments Literature No. SNVA009 (www.ti.com/lit/snva009).

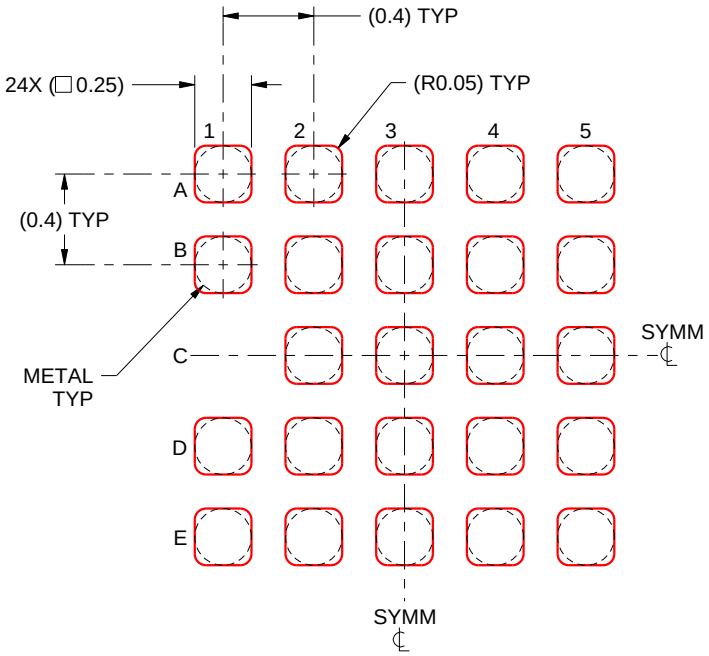

SOLDER PASTE EXAMPLE
BASED ON 0.1 mm THICK STENCIL
SCALE:30X

4221561/A 02/2016

NOTES: (continued)

4. Laser cutting apertures with trapezoidal walls and rounded corners may offer better paste release.

IMPORTANT NOTICE AND DISCLAIMER

TI PROVIDES TECHNICAL AND RELIABILITY DATA (INCLUDING DATASHEETS), DESIGN RESOURCES (INCLUDING REFERENCE DESIGNS), APPLICATION OR OTHER DESIGN ADVICE, WEB TOOLS, SAFETY INFORMATION, AND OTHER RESOURCES “AS IS” AND WITH ALL FAULTS, AND DISCLAIMS ALL WARRANTIES, EXPRESS AND IMPLIED, INCLUDING WITHOUT LIMITATION ANY IMPLIED WARRANTIES OF MERCHANTABILITY, FITNESS FOR A PARTICULAR PURPOSE OR NON-INFRINGEMENT OF THIRD PARTY INTELLECTUAL PROPERTY RIGHTS.

These resources are intended for skilled developers designing with TI products. You are solely responsible for (1) selecting the appropriate TI products for your application, (2) designing, validating and testing your application, and (3) ensuring your application meets applicable standards, and any other safety, security, regulatory or other requirements.

These resources are subject to change without notice. TI grants you permission to use these resources only for development of an application that uses the TI products described in the resource. Other reproduction and display of these resources is prohibited. No license is granted to any other TI intellectual property right or to any third party intellectual property right. TI disclaims responsibility for, and you fully indemnify TI and its representatives against any claims, damages, costs, losses, and liabilities arising out of your use of these resources.

TI’s products are provided subject to TI’s Terms of Sale, TI’s General Quality Guidelines, or other applicable terms available either on ti.com or provided in conjunction with such TI products. TI’s provision of these resources does not expand or otherwise alter TI’s applicable warranties or warranty disclaimers for TI products. Unless TI explicitly designates a product as custom or customer-specified, TI products are standard, catalog, general purpose devices.

TI objects to and rejects any additional or different terms you may propose.

Copyright © 2025, Texas Instruments Incorporated

Last updated 10/2025