ISO742x Low-Power Dual-Channel Digital Isolators

1 Features

- Highest Signaling Rate: 1 Mbps
- Low Power Consumption, Typical I_{CC} per Channel (3.3-V operation):
  - ISO7420: 1.1 mA, ISO7421: 1.5 mA
- Low Propagation Delay – 9 ns Typical
- Low Skew – 300 ps Typical
- Wide T_A Range: –40°C to 125°C (M-Grade)
- 50-kV/µs Transient Immunity, Typical
- Over 25-Year Isolation Integrity at Rated Voltage
- Operates From 3.3-V and 5-V Supply and Logic Levels
- 3.3-V and 5-V Level Translation
- Narrow Body SOIC-8 Package
- Safety and Regulatory Approvals:
  - 4242 V_{PK} Isolation per DIN V VDE V 0884-10 and DIN EN 61010-1
  - 2500 V_{RMS} Isolation for 1 minute per UL 1577
  - CSA Component Acceptance Notice 5A, IEC 60950-1 and IEC 61010-1 Standards
  - CQC Certification per GB4943.1-2011

2 Applications

- Optocoupler Replacement in:
  - Industrial Fieldbus
    - Profibus
    - Modbus
    - DeviceNet™ Data Buses
  - Servo Control Interface
  - Motor Control
  - Power Supplies
  - Battery Packs

3 Description

The ISO7420, ISO7420M and ISO7421 provide galvanic isolation up to 2500 V_{RMS} for 1 minute per UL. These digital isolators have two isolated channels. Each isolation channel has a logic input and output buffer separated by a silicon dioxide (SiO_2) insulation barrier. Used in conjunction with isolated power supplies, these devices prevent noise currents on a data bus or other circuit from entering the local ground and interfering with or damaging sensitive circuitry. The suffix M indicates wide temperature range (–40°C to 125°C).

These devices have TTL input thresholds and require two supply voltages, 3.3 or 5 V, or any combination. All inputs are 5-V tolerant when supplied from a 3.3-V supply.

Note: The ISO7420 and ISO7421 are specified for signaling rates up to 1 Mbps. Due to their fast response time, under most cases, these devices will also transmit data with much shorter pulse widths. Designers should add external filtering to remove spurious signals with input pulse duration <20 ns if desired.

Device Information(1)

PART NUMBER	PACKAGE	BODY SIZE (NOM)
ISO7420	SOIC (8)	4.90 mm × 3.91 mm
ISO7420M		
ISO7421		

(1) For all available packages, see the orderable addendum at the end of the data sheet.

Simplified Schematic

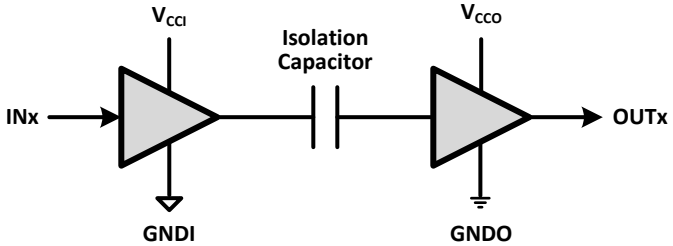

V_{CCI} and GNDI are supply and ground connections respectively for the input channels.

V_{CCO} and GNDO are supply and ground connections respectively for the output channels.

An IMPORTANT NOTICE at the end of this data sheet addresses availability, warranty, changes, use in safety-critical applications, intellectual property matters and other important disclaimers. UNLESS OTHERWISE NOTED, this document contains PRODUCTION DATA.

Table of Contents

1 Features ... 1
2 Applications ... 1
3 Description ... 1
4 Revision History ... 2
5 Pin Configuration and Functions ... 6
6 Specifications ... 7
6.1 Absolute Maximum Ratings ... 7
6.2 ESD Ratings ... 7
6.3 Recommended Operating Conditions ... 7
6.4 Thermal Information ... 8
6.5 Electrical Characteristics: V_{CC1} and V_{CC2} at 5 V ±5% ... 8
6.6 Electrical Characteristics: V_{CC1} at 5 V ±5%, V_{CC2} at 3.3 V ±5% ... 9
6.7 Electrical Characteristics: V_{CC1} at 3.3 V ±5%, V_{CC2} at 5 V ±5% ... 9
6.8 Electrical Characteristics: V_{CC1} and V_{CC2} at 3.3 V ±5% ... 10
6.9 Power Dissipation Characteristics ... 10
6.10 Switching Characteristics: V_{CC1} and V_{CC2} at 5 V ±5% ... 10
6.11 Switching Characteristics: V_{CC1} at 5 V ±5%, V_{CC2} at 3.3 V ±5% ... 10
6.12 Switching Characteristics: V_{CC1} at 3.3 V ±5%, V_{CC2} at 5 V ±5% ... 11
6.13 Switching Characteristics: V_{CC1} and V_{CC2} at 3.3 V ±5% ... 11
6.14 Typical Characteristics ... 12
7 Parameter Measurement Information ... 13
8 Detailed Description ... 14
8.1 Overview ... 14
8.2 Functional Block Diagram ... 14
8.3 Feature Description ... 15
8.4 Device Functional Modes ... 17
9 Application and Implementation ... 18
9.1 Application Information ... 18
9.2 Typical Application ... 18
10 Power Supply Recommendations ... 20
11 Layout ... 20
11.1 Layout Guidelines ... 20
11.2 Layout Example ... 20
12 Device and Documentation Support ... 21
12.1 Documentation Support ... 21
12.2 Related Links ... 21
12.3 Community Resources ... 21
12.4 Trademarks ... 21
12.5 Electrostatic Discharge Caution ... 21
12.6 Glossary ... 21
13 Mechanical, Packaging, and Orderable Information ... 21

4 Revision History

NOTE: Page numbers for previous revisions may differ from page numbers in the current version.

Changes from Revision H (May 2013) to Revision I	Page
• VDE standard changed to DIN V VDE V 0884-10 (VDE V 0884-10):2006-12	1
• Added *Pin Configuration and Functions* section, *ESD Ratings* table, *Feature Description* section, *Device Functional Modes*, *Application and Implementation* section, *Power Supply Recommendations* section, *Layout* section, *Device and Documentation Support* section, and *Mechanical, Packaging, and Orderable Information* section	1

Changes from Revision G (May 2013) to Revision H	Page
• Changed Feature From: 4~242 Vpeak Isolation To: 4242 Vpeak Isolation	1

Changes from Revision F (January 2013) to Revision G	Page
• Changed V_{IORM} in the INSULATION CHARACTERISTICS table, Specification value From: 56~6 To: 566	15
• Changed V_{PR} in the Specification value From: 10~62 To: 1062	15
• Changed V_{IOTM} t = 60 s (qualification) Specification value From: 4~242 To: 4242	15

Changes from Revision E (June 2011) to Revision F	Page
• Changed Feature From: 242 Vpeak Maximum Isolation-per DIN EN 60747-5-2 (VDE 0884 Part 2) - To: 4~242 Vpeak Isolation	1
• Changed Feature From: IEC/VDE and CSA Approvals, IEC 60950-1–IEC 61010-1 End Equipment Standards Approvals, All Approvals Pending To: CSA 60950-1 and IEC 61010-1 Approved	1

Copyright © 2009–2015, Texas Instruments Incorporated

- Added table Note to V_{IORM} 15
- Changed V_{IORM} in the INSULATION CHARACTERISTICS table, Specification value From: 56~0 To: 56~6 15
- Changed V_{PR} in the Specification value From: 10~50 To: 10~62 15
- Changed V_{IOTM} t = 60 s (qualification) Specification value From: 4~000 To: 4~242 15
- Changed the IEC 60664-1 RATINGS TABLE. Row - Basic isolation group SPECIFICATION From: III-a To: II 15
- Changed CTI in the PACKAGE CHARACTERISTICS table, Min value From: >175 To 400 15
- Changed the text of NOTE: 16
- Changed the REGULATORY INFORMATION table 17

Changes from Revision D (July 2010) to Revision E **Page**

- Added new fifth bullet to Features and deleted text from 4-kVpeak bullet item 1
- Changed first paragraph in Description from: ISO7420M, ISO7421, and ISO7421M to: ISO7420M and ISO7421 1
- Changed ISO742xM in the ELEC CHAR and SWITCHING CHAR table to ISO7420M 8
- Changed ISO742xM in the ELEC CHAR and SWITCHING CHAR table to ISO7420M 9
- Changed ISO742xM in the ELEC CHAR and SWITCHING CHAR table to ISO7420M 9
- Changed ISO742xM in the ELEC CHAR and SWITCHING CHAR table to ISO7420M 10
- Changed the MAX value in the SWITCHING CHAR table 2nd row from 3.5 to 3.7 and 3rd row from 4 to 4.9 10
- Changed the MAX value in the 2nd SWITCHING CHAR table 2nd row from 4 to 5.6 and 3rd row from 5 to 6.3 10
- Changed the MAX value in the 3rd SWITCHING CHAR table 3rd row from 5 to 8.5 11
- Changed the MAX value in the 4rd SWITCHING CHAR table 3rd row from 6 to 6.8 11
- Changed Regulatory Information table last row, last column from: pending (E181974) to: E181974 17
- Changed Note 2 in Function Table from: ISO7420M, ISO7421, and ISO7421M to: ISO7420M and ISO7421 17

Changes from Revision C (March 2010) to Revision D **Page**

- Updated the Features List 1
- Deleted devices ISO7420F and ISO7420FM from the data sheet 1
- Updated the device Description. Add paragraph - Note: The ISO7420 and ISO7421 1
- Added Tstg to the Absolute Maximum Ratings Table 7
- Updated the *Recommended Operating Conditions* table 7
- Updates throughout the Electrical Characteristics and Switching Characteristics tables 8
- Updated the Supply Current test conditions 8
- Deleted the SUPPLY CURRENT vs SIGNAL RATE (ALL CHANNELS) graphs and the EYE DIAGRAM plots 12
- Changed Figure 7 13
- Changed the V_{IORM}, V_{PR}, and V_{IOTM} unit values From: V To: Vpeak 15
- Changed Minimum internal gap MIN value From: 0.008 To: 0.014mm 15
- Changed the Barrier capacitance, input to output test conditions 15
- Changed the Input capacitance test conditions 15
- Changed V_I From: 5.5 V To: 5.25 V 16
- Changed From: 107mA To: 112mA 16
- Changed V_I From: 3.6 V To: 3.45 V 16
- Changed From: 164mA To: 171mA 16
- Changed Figure 10 16
- Deleted the I_{CC} equations section 16
- Changed the Function Table Output values for PU (Open) From: H/L To: H 17
- Changed Figure 11 17

Copyright © 2009–2015, Texas Instruments Incorporated

Changes from Revision B (February 2010) to Revision C **Page**

- Added devices ISO7420F and ISO7420FM to the data sheet 1
- Added The suffix M indicates wide temperature range (–55°C to 125°C) and the suffix F indicates output-low option in fail-safe condition. All other devices without the F suffix default to output-high in fail-safe state. 1
- Added ISO7420F and ISO7420FM to the Available Options Table 6
- Changed value from a max of 4 mA to a min of –4 mA 7
- Changed value from a min of –4 mA to a max of 4 mA 7
- Changed Electrical Characteristics Conditions 8
- Deleted C_i from the ELECTRICAL CHARACTERISTICS 8
- Added (All inputs switching with square wave clock signal for dynamic ICC measurement) 8
- Changed ELECTRICAL CHARACTERISTICS conditions 9
- Added High-level output voltage ISO7420 / 7421 (3.3-V side) test condition 9
- Changed High-level output voltage min value 9
- Deleted C_I specification 9
- Added (All inputs switching with square wave clock signal for dynamic ICC measurement) 9
- Changed ELECTRICAL CHARACTERISTICS conditions 9
- Added High-level output voltage ISO7420 / 7421 (5-V side) test condition 9
- Changed High-level output voltage min value 9
- Deleted C_I specification 9
- Added (All inputs switching with square wave clock signal for dynamic ICC measurement) 9
- Changed ELECTRICAL CHARACTERISTICS conditions 10
- Deleted C_I specification 10
- Added (All inputs switching with square wave clock signal for dynamic ICC measurement) 10
- Changed SWITCHING CHARACTERISTICS conditions 10
- Changed PWD parameter from duration to width 10
- Changed *Switching Characteristics* conditions 10
- Changed Pulse duration distortion to Pulse width distortion 10
- Changed *Switching Characteristics* conditions 11
- Changed SWITCHING CHARACTERISTICS conditions 11
- Changed Pulse duration distortion to Pulse width distortion 11
- Changed SWITCHING CHARACTERISTICS conditions 11
- Changed Pulse duration distortion to Pulse width distortion 11
- Changed Figure 7 13
- Added input to output and note 1 to Isolation resistance, input to output 15
- Changed the Isolation resistance test conditions 15
- Changed the Isolation resistance test conditions 15
- Added note 1 to Barrier capacitance, input to output 15
- Added Input capacitance 15
- Changed T_J = 170°C to T_J = 150°C 16
- Changed From: 124mA To: 107mA 16
- Changed T_J = 170°C to T_J = 150°C 16
- Changed From: 190mA To: 164mA 16
- Changed Figure 10 16
- Changed the Function Table Output values for PU (Open) From: H To: H/L 17
- Changed the Function Table Output values for PU (X) From: H To: H/L 17
- Changed the Function Table Output values for PU (X) From: H/L To: H 17

Copyright © 2009–2015, Texas Instruments Incorporated

- Added Note (2) in the Function Table 17
- Changed Figure 11 17

Changes from Revision A (December 2009) to Revision B **Page**

- Switching Characteristics Table, Added Note (2) - Typical specifications are measured at ideal conditions of 25°C. Max or Min specifications are measured at worst case conditions for V_{CC} and temperature. 8

Changes from Original (June 2009) to Revision A **Page**

- Added devices ISO7420 and ISO7420M to the data sheet 1
- Added the I_{CC} equations section 16

5 Pin Configuration and Functions

ISO7420: D Package
8-Pin SOIC
(Top View)

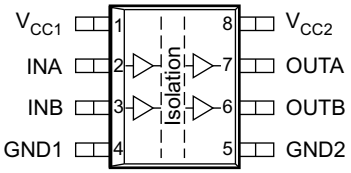

ISO7421: D Package
8-Pin SOIC
(Top View)

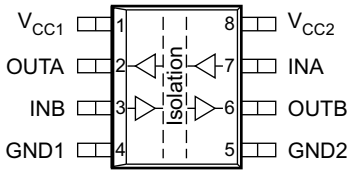

Pin Functions

PIN			I/O	DESCRIPTION
NAME	ISO7420	ISO7421		
GND1	4	4	—	Ground connection for V_{CC1}
GND2	5	5	—	Ground connection for V_{CC2}
INA	2	7	I	Input, channel A
INB	3	3	I	Input, channel B
OUTA	7	2	O	Output, channel A
OUTB	6	6	O	Output, channel B
V_{CC1}	1	1	—	Power supply, V_{CC1}
V_{CC2}	8	8	—	Power supply, V_{CC2}

Copyright © 2009–2015, Texas Instruments Incorporated

6 Specifications

6.1 Absolute Maximum Ratings

See (1)		MIN	MAX	UNIT
V_{CC}	Supply voltage (2), V_{CC1}, V_{CC2}	–0.5	6	V
V_I	Voltage at IN, OUT	–0.5	V_{CC} + 0.5 (3)	V
I_O	Output current	–15	15	mA
$T_{J(max)}$	Maximum junction temperature		150	°C
T_{stg}	Storage temperature	–65	150	°C

(1) Stresses beyond those listed under *Absolute Maximum Ratings* may cause permanent damage to the device. These are stress ratings only and functional operation of the device at these or any other conditions beyond those indicated under *Recommended Operating Conditions* is not implied. Exposure to absolute-maximum-rated conditions for extended periods may affect device reliability.
(2) All voltage values except differential I/O bus voltages are with respect to network ground terminal and are peak voltage values.
(3) Maximum voltage must not exceed 6 V.

6.2 ESD Ratings

			VALUE	UNIT
$V_{(ESD)}$	Electrostatic discharge	Human body model (HBM), per ANSI/ESDA/JEDEC JS-001 (1)	±4000	V
		Field-induced charged-device model, JEDEC Standard 22, Test Method C101	±1500	
		Machine model, ANSI/ESDS5.2-1996	±200	

(1) JEDEC document JEP155 states that 500-V HBM allows safe manufacturing with a standard ESD control process.

6.3 Recommended Operating Conditions

			MIN	NOM	MAX	UNIT
V_{CC1}, V_{CC2}	Supply voltage - 3.3-V operation		3.15	3.3	3.45	V
	Supply voltage - 5-V operation		4.75	5	5.25	
I_{OH}	High-level output current		–4			mA
I_{OL}	Low-level output current				4	mA
V_{IH}	High-level input voltage		2		5.25	V
V_{IL}	Low-level input voltage		0		0.8	V
$1/t_{ui}$	Signaling rate		0		1	Mbps
t_{ui}	Input pulse duration		1			us
T_J (1)	Junction temperature		–40		136	°C
T_A	Ambient temperature	ISO7420, ISO7421	-40	25	105	°C
		ISO7420M	-40	25	125	

(1) To maintain the recommended operating conditions for T_J, see the *Thermal Information*.

6.4 Thermal Information

THERMAL METRIC[1]			ISO742x D (SOIC) 8 PINS	UNIT
$R_{\theta JA}$	Junction-to-ambient thermal resistance	Low-K Board	212	°C/W
		High-K Board	116.6	
$R_{\theta JC(top)}$	Junction-to-case (top) thermal resistance		71.6	°C/W
$R_{\theta JB}$	Junction-to-board thermal resistance		57.3	°C/W
ψ_{JT}	Junction-to-top characterization parameter		28.3	°C/W
ψ_{JB}	Junction-to-board characterization parameter		56.8	°C/W

(1) For more information about traditional and new thermal metrics, see the *Semiconductor and IC Package Thermal Metrics* application report, SPRA953.

6.5 Electrical Characteristics: V_{CC1} and V_{CC2} at 5 V ±5%

T_A = –40°C to 125°C for ISO7420M, T_A = –40°C to 105°C for ISO742x

PARAMETER		TEST CONDITIONS		MIN	TYP	MAX	UNIT
V_{OH}	High-level output voltage	I_{OH} = –4 mA; see Figure 6.		V_{CCO}[1] – 0.8	4.6		V
		I_{OH} = –20 µA; see Figure 6.		V_{CCO} – 0.1	5		
V_{OL}	Low-level output voltage	I_{OL} = 4 mA; see Figure 6.			0.2	0.4	V
		I_{OL} = 20 µA; see Figure 6.			0	0.1	
$V_{I(HYS)}$	Input threshold voltage hysteresis				400		mV
I_{IH}	High-level input current	INx at 0 V or V_{CCI} [1]				10	µA
I_{IL}	Low-level input current			–10			µA
CMTI	Common-mode transient immunity	V_I = V_{CCI} or 0 V; see Figure 8.		25	50		kV/µs
SUPPLY CURRENT (ALL INPUTS SWITCHING WITH SQUARE WAVE CLOCK SIGNAL FOR DYNAMIC ICC MEASUREMENT)							
ISO7420							
I_{CC1}	Supply current for V_{CC1}	DC to 1 Mbps	V_I = V_{CCI} or 0 V, 15 pF load		0.4	1	mA
I_{CC2}	Supply current for V_{CC2}				3	6	
ISO7421							
I_{CC1}	Supply current for V_{CC1}	DC to 1 Mbps	V_I = V_{CCI} or 0 V, 15 pF load		2	4	mA
I_{CC2}	Supply current for V_{CC2}				2	4	

(1) V_{CCI} = Input-side power supply, V_{CCO} = Output-side power supply

Copyright © 2009–2015, Texas Instruments Incorporated

6.6 Electrical Characteristics: V_{CC1} at 5 V ±5%, V_{CC2} at 3.3 V ±5%

T_A = –40°C to 125°C for ISO7420M, T_A = –40°C to 105°C for ISO742x

PARAMETER		TEST CONDITIONS		MIN	TYP	MAX	UNIT
V_{OH}	High-level output voltage	I_{OH} = –4 mA; see Figure 6.	ISO7421 (5-V side)	V_{CCO} (1) – 0.8	4.6		V
			ISO7420 / 7421 (3.3-V side).	V_{CCO} – 0.4	3		
		I_{OH} = –20 µA; see Figure 6,		V_{CCO} – 0.1	V_{CC}		
V_{OL}	Low-level output voltage	I_{OL} = 4 mA; see Figure 6.			0.2	0.4	V
		I_{OL} = 20 µA; see Figure 6.			0	0.1	
$V_{I(HYS)}$	Input threshold voltage hysteresis				400		mV
I_{IH}	High-level input current	INx at 0 V or V_{CCI} (1)				10	µA
I_{IL}	Low-level input current			–10			µA
CMTI	Common-mode transient immunity	V_I = V_{CCI} or 0 V; seeFigure 8 .		25	40		kV/µs
SUPPLY CURRENT (ALL INPUTS SWITCHING WITH SQUARE WAVE CLOCK SIGNAL FOR DYNAMIC ICC MEASUREMENT)							
ISO7420							
I_{CC1}	Supply current for V_{CC1}	DC to 1 Mbps	V_I = V_{CCI} or 0 V, 15 pF load		0.4	1	mA
I_{CC2}	Supply current for V_{CC2}				2	4.5	mA
ISO7421							
I_{CC1}	Supply current for V_{CC1}	DC to 1 Mbps	V_I = V_{CCI} or 0 V, 15 pF load		2	4	mA
I_{CC2}	Supply current for V_{CC2}				1.5	3.5	mA

(1) V_{CCI} = Input-side power supply, V_{CCO} = Output-side power supply

6.7 Electrical Characteristics: V_{CC1} at 3.3 V ±5%, V_{CC2} at 5 V ±5%

T_A = –40°C to 125°C for ISO7420M, T_A = –40°C to 105°C for ISO742x

PARAMETER		TEST CONDITIONS		MIN	TYP	MAX	UNIT
V_{OH}	High-level output voltage	I_{OH} = –4 mA; see Figure 6.	ISO7420 / 7421 (5-V side).	V_{CCO} (1) – 0.8	4.6		V
			ISO7421 (3.3-V side)	V_{CCO} – 0.4	3		
		I_{OH} = –20 µA; see Figure 6		V_{CCO} – 0.1	V_{CC}		
V_{OL}	Low-level output voltage	I_{OL} = 4 mA; see Figure 6.			0.2	0.4	V
		I_{OL} = 20 µA; see Figure 6.			0	0.1	
$V_{I(HYS)}$	Input threshold voltage hysteresis				400		mV
I_{IH}	High-level input current	INx at 0 V or V_{CCI} (1)				10	µA
I_{IL}	Low-level input current			–10			µA
CMTI	Common-mode transient immunity	V_I = V_{CCI} or 0 V; see Figure 8.		25	40		kV/µs
SUPPLY CURRENT (ALL INPUTS SWITCHING WITH SQUARE WAVE CLOCK SIGNAL FOR DYNAMIC ICC MEASUREMENT)							
ISO7420							
I_{CC1}	Supply current for V_{CC1}	DC to 1 Mbps	V_I = V_{CCI} or 0 V, 15 pF load		0.2	0.7	mA
I_{CC2}	Supply current for V_{CC2}				3	6	
ISO7421							
I_{CC1}	Supply current for V_{CC1}	DC to 1 Mbps	V_I = V_{CCI} or 0 V, 15 pF load		1.5	3.5	mA
I_{CC2}	Supply current for V_{CC2}				2	4	

(1) V_{CCI} = Input-side power supply, V_{CCO} = Output-side power supply

Copyright © 2009–2015, Texas Instruments Incorporated

6.8 Electrical Characteristics: V_{CC1} and V_{CC2} at 3.3 V ±5%

T_A = –40°C to 125°C for ISO7420M, T_A = –40°C to 105°C for ISO742x

PARAMETER		TEST CONDITIONS		MIN	TYP	MAX	UNIT
V_{OH}	High-level output voltage	I_{OH} = –4 mA; see Figure 6.		V_{CCO} (1) – 0.4	3		V
		I_{OH} = –20 µA; see Figure 6.		V_{CCO} – 0.1	3.3		
V_{OL}	Low-level output voltage	I_{OL} = 4 mA; see Figure 6.			0.2	0.4	V
		I_{OL} = 20 µA; see Figure 6.			0	0.1	
$V_{I(HYS)}$	Input threshold voltage hysteresis				400		mV
I_{IH}	High-level input current	INx at 0 V or V_{CCI} (1)				10	µA
I_{IL}	Low-level input current			–10			µA
CMTI	Common-mode transient immunity	V_I = V_{CCI} or 0 V; seeFigure 8 .		25	40		kV/µs
SUPPLY CURRENT (ALL INPUTS SWITCHING WITH SQUARE WAVE CLOCK SIGNAL FOR DYNAMIC ICC MEASUREMENT)							
ISO7420							
I_{CC1}	Supply current for V_{CC1}	DC to 1 Mbps	V_I = V_{CCI} or 0 V, 15 pF load		0.2	0.7	mA
I_{CC2}	Supply current for V_{CC2}				2	4.5	
ISO7421							
I_{CC1}	Supply current for V_{CC1}	DC to 1 Mbps	V_I = V_{CCI} or 0 V, 15 pF load		1.5	3.5	mA
I_{CC2}	Supply current for V_{CC2}				1.5	3.5	

(1) V_{CCI} = Input-side power supply, V_{CCO} = Output-side power supply

6.9 Power Dissipation Characteristics

THERMAL METRIC			ISO742x D (SOIC) 8 PINS	UNIT
P_D	Device power dissipation	V_{CC1} = V_{CC2} = 5.25 V, T_J = 150°C, C_L = 15 pF Input a 1-Mbps 50% duty-cycle square wave	55	mW

6.10 Switching Characteristics: V_{CC1} and V_{CC2} at 5 V ±5%

T_A = –40°C to 125°C for ISO7420M, T_A = –40°C to 105°C for ISO742x

PARAMETER		TEST CONDITIONS	MIN	TYP	MAX	UNIT
t_{PLH}, t_{PHL}	Propagation delay time	See Figure 6.		9	14	ns
PWD (1)	Pulse width distortion $\lvert t_{PHL} – t_{PLH}\rvert$			0.3	3.7	ns
$t_{sk(pp)}$	Part-to-part skew time				4.9	ns
$t_{sk(o)}$	Channel-to-channel output skew time				3.6	ns
t_r	Output signal rise time	See Figure 6.		1		ns
t_f	Output signal fall time			1		ns
t_{fs}	Fail-safe output delay time from input power loss	See Figure 7.		6		µs

(1) Also known as pulse skew.

6.11 Switching Characteristics: V_{CC1} at 5 V ±5%, V_{CC2} at 3.3 V ±5%

T_A = –40°C to 125°C for ISO7420M, T_A = –40°C to 105°C for ISO742x

PARAMETER		TEST CONDITIONS	MIN	TYP	MAX	UNIT
t_{PLH}, t_{PHL}	Propagation delay time	See Figure 6.		10	17	ns
PWD (1)	Pulse width distortion $\lvert t_{PHL} – t_{PLH}\rvert$			0.5	5.6	ns
$t_{sk(pp)}$	Part-to-part skew time				6.3	ns
$t_{sk(o)}$	Channel-to-channel output skew time				4	ns
t_r	Output signal rise time	See Figure 6.		2		ns

(1) Also known as pulse skew.

Copyright © 2009–2015, Texas Instruments Incorporated

Switching Characteristics: V_{CC1} at 5 V ±5%, V_{CC2} at 3.3 V ±5% (continued)

T_A = –40°C to 125°C for ISO7420M, T_A = –40°C to 105°C for ISO742x

PARAMETER		TEST CONDITIONS	MIN	TYP	MAX	UNIT
t_f	Output signal fall time			2		ns
t_{fs}	Fail-safe output delay time from input power loss	See Figure 7.		6		µs

6.12 Switching Characteristics: V_{CC1} at 3.3 V ±5%, V_{CC2} at 5 V ±5%

T_A = –40°C to 125°C for ISO7420M, T_A = –40°C to 105°C for ISO742x

PARAMETER		TEST CONDITIONS	MIN	TYP	MAX	UNIT
t_{PLH}, t_{PHL}	Propagation delay time	See Figure 6.		10	17	ns
PWD (1)	Pulse width distortion $\lvert t_{PHL} – t_{PLH} \rvert$			0.5	4	ns
$t_{sk(pp)}$	Part-to-part skew time				8.5	ns
$t_{sk(o)}$	Channel-to-channel output skew time				4	ns
t_r	Output signal rise time	See Figure 6.		2		ns
t_f	Output signal fall time			2		ns
t_{fs}	Fail-safe output delay time from input power loss	See Figure 7.		6		µs

(1) Also known as pulse skew.

6.13 Switching Characteristics: V_{CC1} and V_{CC2} at 3.3 V ±5%

T_A = –40°C to 125°C for ISO7420M, T_A = –40°C to 105°C for ISO742x

PARAMETER		TEST CONDITIONS	MIN	TYP	MAX	UNIT
t_{PLH}, t_{PHL}	Propagation delay time	See Figure 6.		12	20	ns
PWD (1)	Pulse width distortion $\lvert t_{PHL} – t_{PLH} \rvert$			1	5	ns
$t_{sk(pp)}$	Part-to-part skew time				6.8	ns
$t_{sk(o)}$	Channel-to-channel output skew time				5.5	ns
t_r	Output signal rise time	See Figure 6.		2		ns
t_f	Output signal fall time			2		ns
t_{fs}	Fail-safe output delay time from input power loss	See Figure 7.		6		µs

(1) Also known as pulse skew.

Copyright © 2009–2015, Texas Instruments Incorporated

6.14 Typical Characteristics

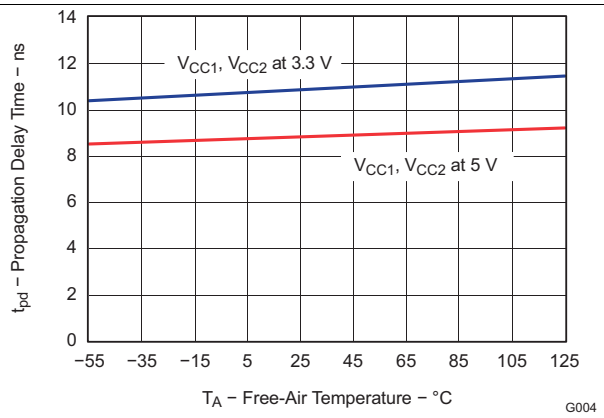

Figure 1. Propagation Delay Time vs Free-Air Temperature

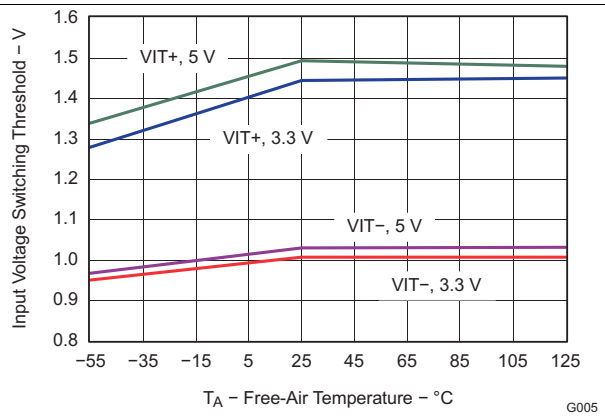

Figure 2. Input Voltage Switching Threshold vs Free-Air Temperature

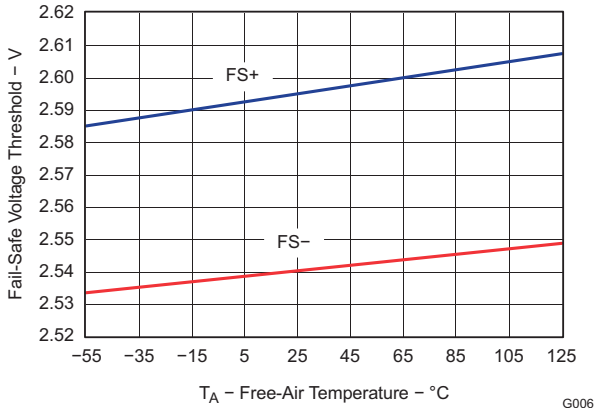

Figure 3. Fail-Safe Voltage Threshold vs Free-Air Temperature

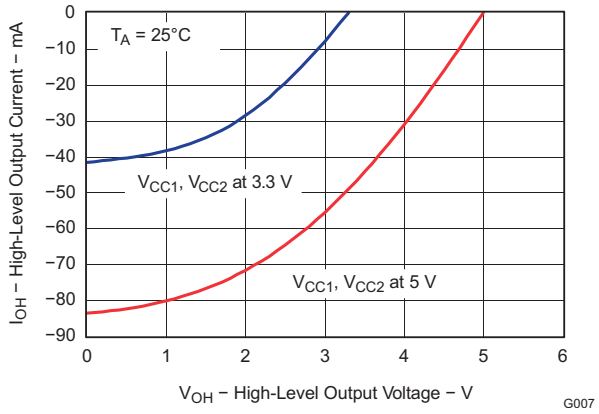

Figure 4. High-Level Output Current vs High-Level Output Voltage

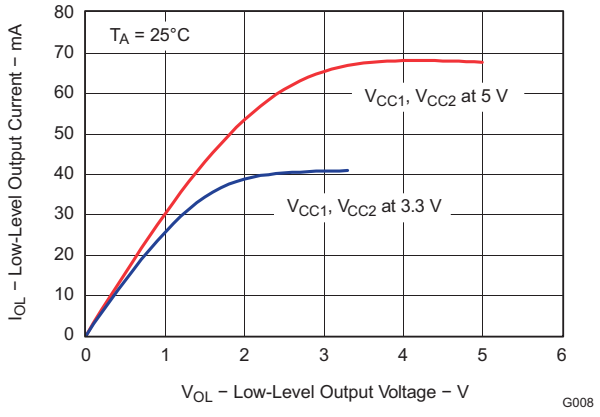

Figure 5. Low-Level Output Current vs Low-Level Output Voltage

Copyright © 2009–2015, Texas Instruments Incorporated

7 Parameter Measurement Information

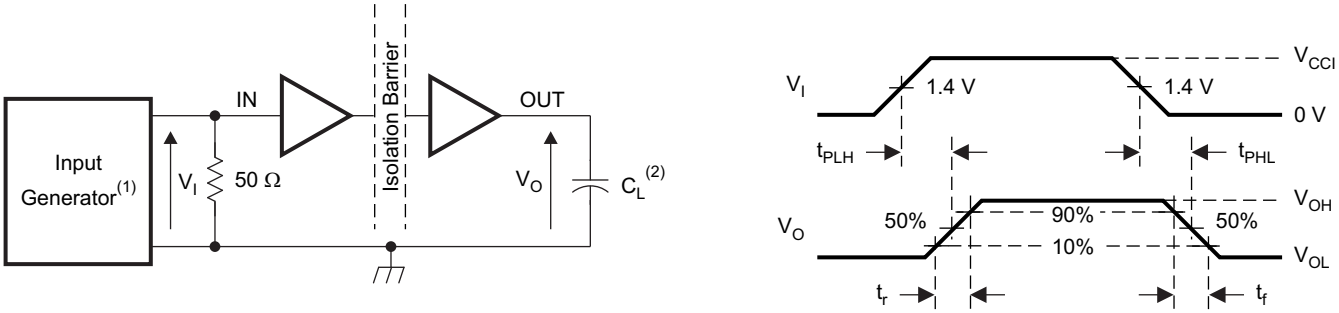

(1) The input pulse is supplied by a generator having the following characteristics: PRR ≤ 50 kHz, 50% duty cycle, t_r ≤ 3 ns, t_f ≤ 3 ns, Z_O = 50 Ω. At the input, a 50-Ω resistor is required to terminate the Input Generator signal. It is not needed in actual application.

(2) C_L = 15 pF and includes instrumentation and fixture capacitance within ±20%.

Figure 6. Switching Characteristic Test Circuit and Voltage Waveforms

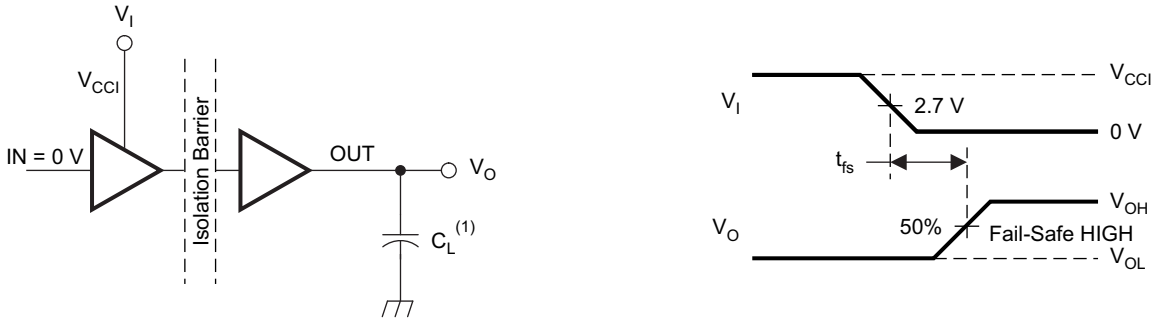

(1) C_L = 15 pF ± 20% includes instrumentation and fixture capacitance.

Figure 7. Fail-Safe Output Delay-Time Test Circuit and Voltage Waveforms

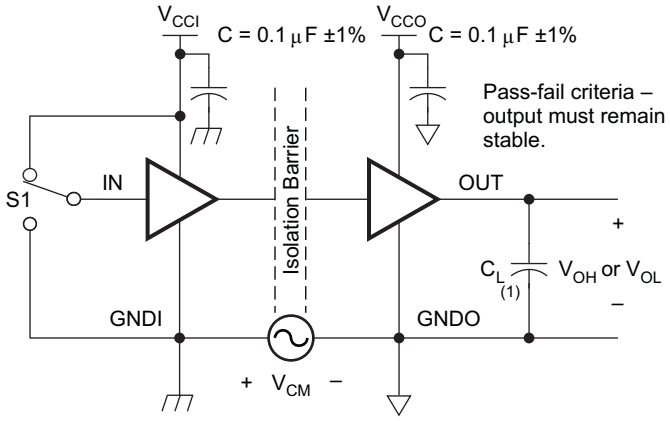

(1) C_L = 15 pF and includes instrumentation and fixture capacitance within ±20%.

Figure 8. Common-Mode Transient Immunity Test Circuit

8 Detailed Description

8.1 Overview

The isolator in Figure 9 is based on a capacitive isolation barrier technique. The I/O channel of the device consists of two internal data channels, a high-frequency channel (HF) with a bandwidth from 100 kbps up to 1 Mbps, and a low-frequency channel (LF) covering the range from 100 kbps down to DC. In principle, a single- ended input signal entering the HF-channel is split into a differential signal via the inverter gate at the input. The following capacitor-resistor networks differentiate the signal into transients, which then are converted into differential pulses by two comparators. The comparator outputs drive a NOR-gate flip-flop whose output feeds an output multiplexer. A decision logic (DCL) at the driving output of the flip-flop measures the durations between signal transients. If the duration between two consecutive transients exceeds a certain time limit, (as in the case of a low-frequency signal), the DCL forces the output-multiplexer to switch from the high- to the low-frequency channel.

Because low-frequency input signals require the internal capacitors to assume prohibitively large values, these signals are pulse-width modulated (PWM) with the carrier frequency of an internal oscillator, thus creating a sufficiently high frequency signal, capable of passing the capacitive barrier. As the input is modulated, a low-pass filter (LPF) is needed to remove the high-frequency carrier from the actual data before passing it on to the output multiplexer.

8.2 Functional Block Diagram

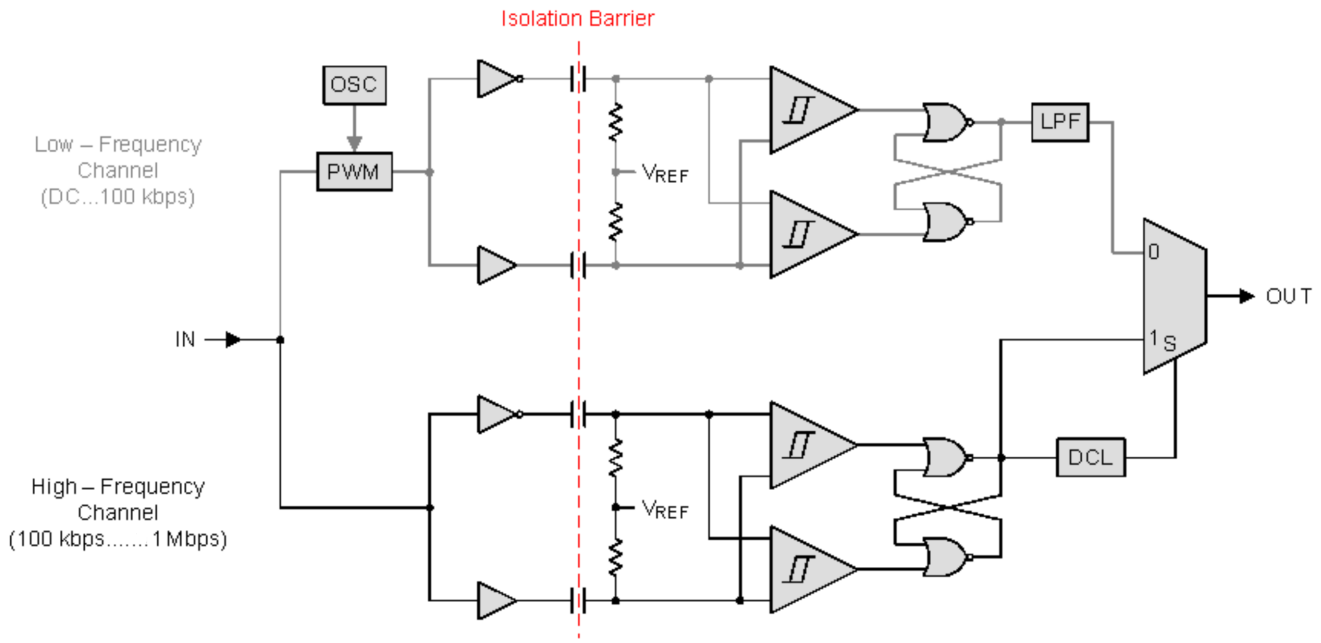

Figure 9. Conceptual Block Diagram of a Digital Capacitive Isolator

Copyright © 2009–2015, Texas Instruments Incorporated

8.3 Feature Description

8.3.1 Insulation Characteristics

over recommended operating conditions (unless otherwise noted)

PARAMETER(1)		TEST CONDITIONS	SPECIFICATION	UNIT
DIN V VDE V 0884-10 (VDE V 0884-10):2006-12				
V_{IORM}	Maximum working insulation voltage		566	V_{PK}
V_{PR}	Input-to-output test voltage	t = 1 s (100% production), partial discharge 5 pC	1062	V_{PK}
V_{IOTM}	Transient overvoltage	t = 60 s (qualification)	4242	V_{PK}
		t = 1 s (100% production)		
R_S	Insulation resistance	V_{IO} = 500 V at T_S	$>10^9$	Ω
	Pollution degree		2	
UL 1577				
V_{ISO}	Isolation voltage per UL	$V_{TEST} = V_{ISO}$ = 2500 V_{RMS}, t = 60 s (qualification) V_{TEST} = 1.2 x V_{ISO} = 3000 V_{RMS}, t = 1 s (100% production)	2500	V_{RMS}

(1) Climatic Classification 40/125/21

Table 1. IEC 60664-1 Ratings Table

PARAMETER	TEST CONDITIONS	SPECIFICATION
Material group		II
Installation classification	Rated mains voltage ≤ 150 V_{RMS}	I–IV
	Rated mains voltage ≤ 300 V_{RMS}	I–III

8.3.2 Package Characteristics

over recommended operating conditions (unless otherwise noted)

PARAMETER		TEST CONDITIONS	MIN	TYP	MAX	UNIT
L(I01)	Minimum air gap (clearance)	Shortest terminal-to-terminal distance through air	4			mm
L(I02)	Minimum external tracking (creepage)	Shortest terminal-to-terminal distance across the package surface	4			mm
CTI	Tracking resistance (comparative tracking index)	DIN EN 60112 (VDE 0303-11); IEC 60112	>400			V
DTI	Distance through the insulation	Minimum internal gap (internal clearance)	0.014			mm
R_{IO}	Isolation resistance, input to output(1)	V_{IO} = 500 V, T_A = 25°C		$>10^{12}$		Ω
		V_{IO} = 500 V, 100°C ≤ T_A ≤ max		$>10^{11}$		Ω
C_{IO}	Barrier capacitance, input to output(1)	V_{IO} = 0.4 sin (2πft), f = 1 MHz		1		pF
C_I	Input capacitance(2)	$V_I = V_{CC}/2$ + 0.4 sin (2πft), f = 1 MHz, V_{CC} = 5 V		1		pF

(1) All pins on each side of the barrier tied together creating a two-terminal device.
(2) Measured from input pin to ground.

NOTE

Creepage and clearance requirements should be applied according to the specific equipment isolation standards of an application. Care should be taken to maintain the creepage and clearance distance of a board design to ensure that the mounting pads of the isolator on the printed-circuit board do not reduce this distance.

Creepage and clearance on a printed-circuit board become equal in certain cases. Techniques such as inserting grooves and/or ribs on a printed circuit board are used to help increase these specifications.

8.3.3 Safety Limiting Values

Safety limiting intends to prevent potential damage to the isolation barrier upon failure of input or output circuitry. A failure of the I/O can allow low resistance to ground or the supply and, without current limiting, dissipate sufficient power to overheat the die and damage the isolation barrier, potentially leading to secondary system failures.

PARAMETER		TEST CONDITIONS	MIN	TYP	MAX	UNIT
I_S	Safety input, output, or supply current	θ_{JA} = 212°C/W, V_I = 5.25 V, T_J = 150°C, T_A = 25°C			112	mA
		θ_{JA} = 212°C/W, V_I = 3.45 V, T_J = 150°C, T_A = 25°C			171	
T_S	Maximum safety temperature				150	°C

The safety-limiting constraint is the absolute-maximum junction temperature specified in the *Absolute Maximum Ratings* table. The power dissipation and junction-to-air thermal impedance of the device installed in the application hardware determines the junction temperature. The assumed junction-to-air thermal resistance in the *Thermal Information* table is that of a device installed in the JESD51-3, Low-Effective-Thermal-Conductivity Test Board for Leaded Surface-Mount Packages and is conservative. The power is the recommended maximum input voltage times the current. The junction temperature is then the ambient temperature plus the power times the junction-to-air thermal resistance.

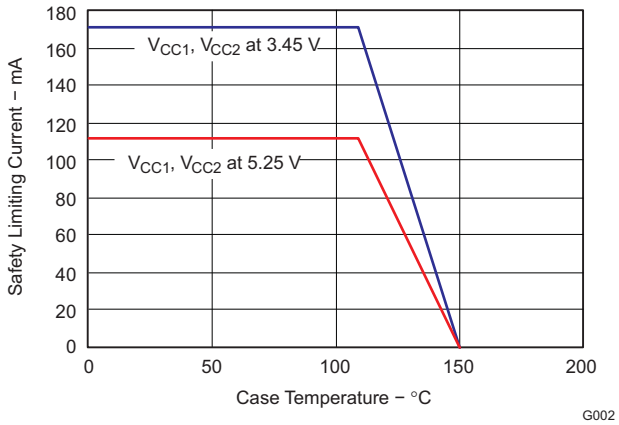

Figure 10. θ_{JC} Thermal Derating Curve per VDE

Copyright © 2009–2015, Texas Instruments Incorporated

8.3.4 Regulatory Information

VDE	CSA	UL	CQC
Certified according to DIN V VDE V 0884-10 (VDE V 0884-10):2006-12 and DIN EN 61010-1 (VDE 0411-1): 2011-07	Approved under CSA Component Acceptance Notice #5A	Recognized under UL1577 Component Recognition Program(1)	Certified according to GB4943.1-2011
Basic Insulation Maximum Transient Overvoltage, 4242 V_{PK} Maximum Working Voltage, 566 V_{PK}	Basic insulation per CSA 60950-1-07 and IEC 60950-1 (2nd Ed), 390 VRMS maximum working voltage	Single Protection, 2500 V_{RMS}	Basic Insulation, Altitude ≤ 5000 m, Tropical Climate, 250 V_{RMS} maximum working voltage
Certificate number: 40016131	Master contract number: 220991	File number: E181974	Certificate number: CQC14001109540

(1) Production tested ≥ 3000 V_{RMS} for 1 second in accordance with UL 1577.

8.4 Device Functional Modes

Table 2. Function Table(1)

VCCI	VCCO	INPUT INA, INB	OUTPUT OUTA, OUTB
PU	PU	H	H
		L	L
		Open	H(2)
PD	PU	X	H(2)
X	PD	X	Undetermined

(1) V_{CCI} = Input-side power supply; V_{CCO} = Output-side power supply; PU = Powered up (V_{CC} ≥ 3.15 V); PD = Powered down (V_{CC} ≤ 2.1 V); X = Irrelevant; H = High level; L = Low level
(2) In fail-safe condition, output defaults to high level.

8.4.1 Device I/O Schematics

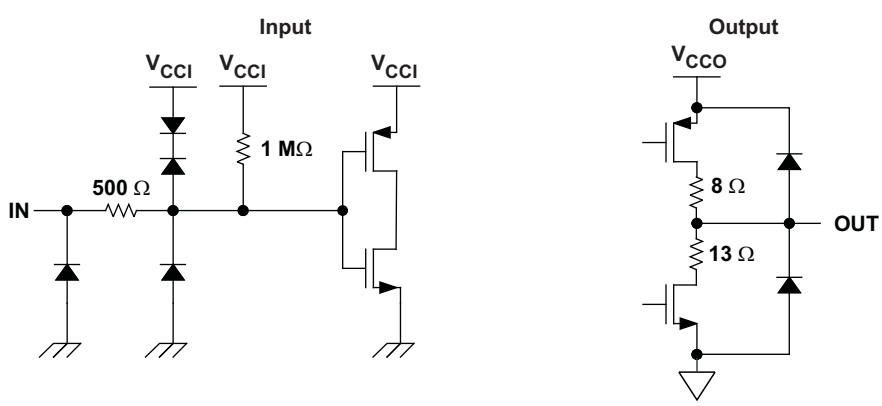

Figure 11. Device I/O Schematics

9 Application and Implementation

NOTE

Information in the following applications sections is not part of the TI component specification, and TI does not warrant its accuracy or completeness. TI's customers are responsible for determining suitability of components for their purposes. Customers should validate and test their design implementation to confirm system functionality.

9.1 Application Information

ISO742x utilize single-ended TTL-logic switching technology. Its supply voltage range is from 3.15 V to 5.25 V for both supplies, V_{CC1} and V_{CC2}. When designing with digital isolators, it is important to keep in mind that due to the single-ended design structure, digital isolators do not conform to any specific interface standard and are only intended for isolating single-ended CMOS or TTL digital signal lines. The isolator is typically placed between the data controller (i.e. µC or UART), and a data converter or a line transceiver, regardless of the interface type or standard.

9.2 Typical Application

ISO7421 can be used with Texas Instruments' mixed signal micro-controller, digital-to-analog converter, transformer driver, and voltage regulator to create an isolated 4-20 mA current loop.

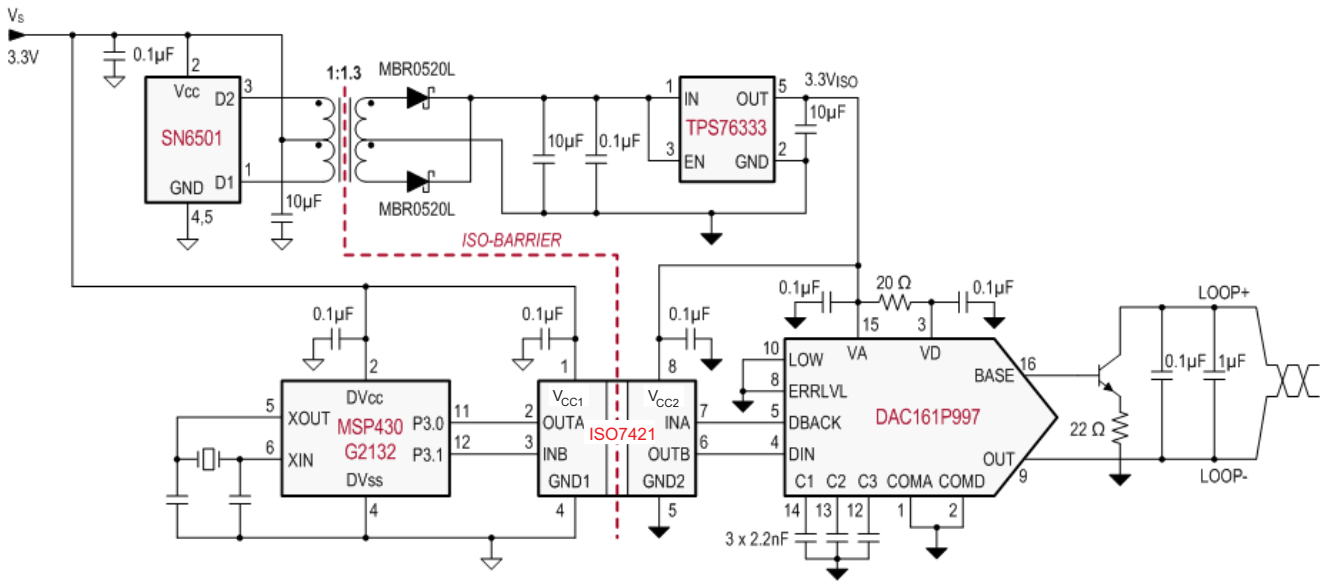

Figure 12. Isolated 4-20 mA Current Loop

9.2.1 Design Requirements

Unlike optocouplers, which require external components to improve performance, provide bias, or limit current, the ISO742x only require two external bypass capacitors to operate.

Copyright © 2009–2015, Texas Instruments Incorporated

Typical Application (continued)

9.2.2 Detailed Design Procedure

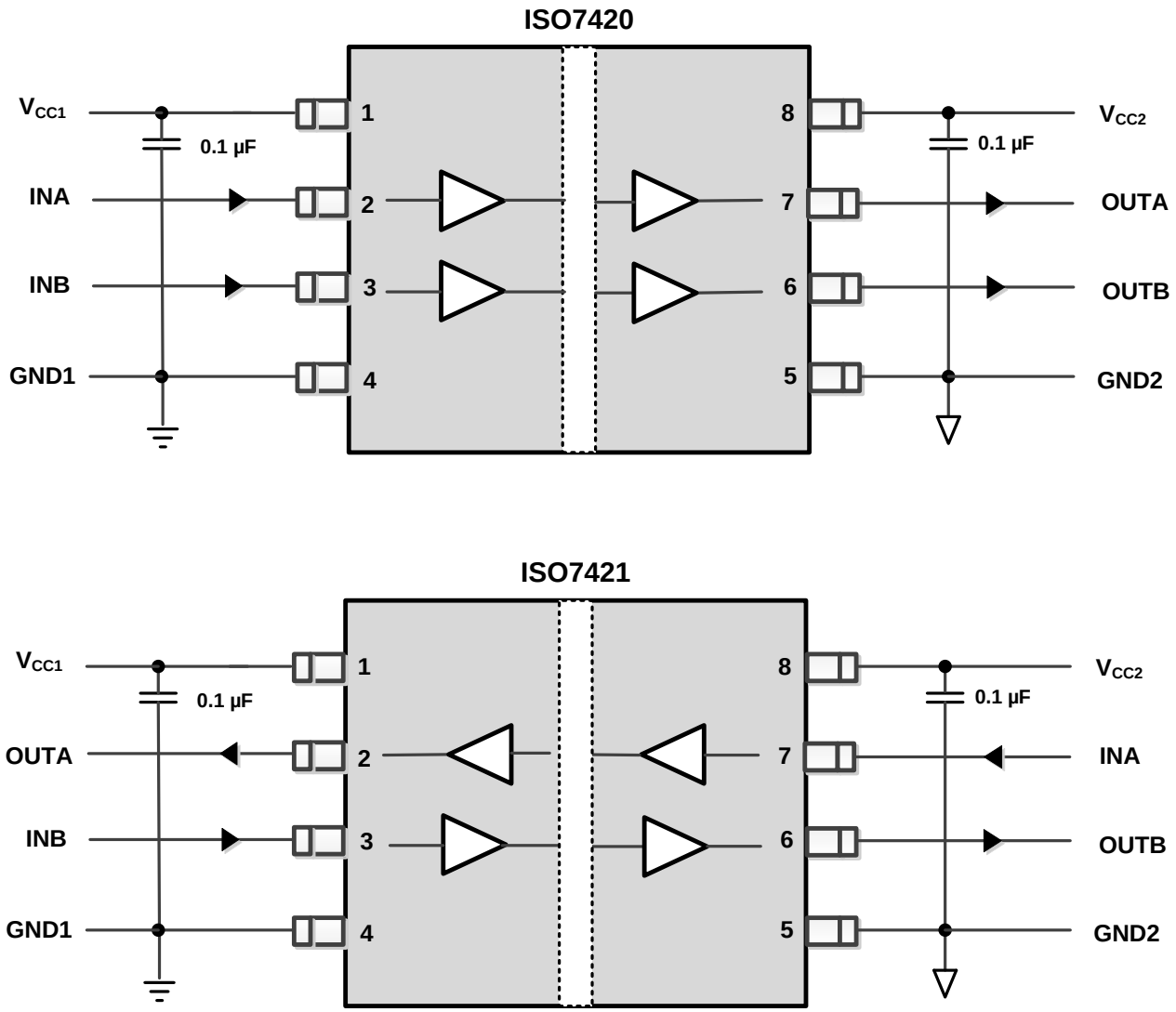

Figure 13. Typical ISO7420 and ISO7421 Circuit Hookup

9.2.3 Application Curve

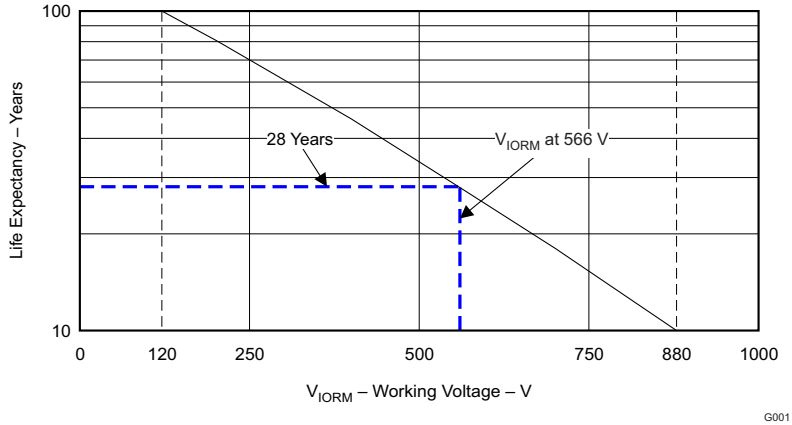

Figure 14. Life Expectancy vs Working Voltage

10 Power Supply Recommendations

To ensure reliable operation at all data rates and supply voltages, a 0.1 µF bypass capacitor is recommended at input and output supply pins (V_{CC1} and V_{CC2}). The capacitors should be placed as close to the supply pins as possible. If only a single primary-side power supply is available in an application, isolated power can be generated for the secondary-side with the help of a transformer driver such as Texas Instruments' SN6501. For such applications, detailed power supply design and transformer selection recommendations are available in SN6501 datasheet (SLLSEA0).

11 Layout

11.1 Layout Guidelines

A minimum of four layers is required to accomplish a low EMI PCB design (see Figure 15). Layer stacking should be in the following order (top-to-bottom): high-speed signal layer, ground plane, power plane and low-frequency signal layer.

- Routing the high-speed traces on the top layer avoids the use of vias (and the introduction of their inductances) and allows for clean interconnects between the isolator and the transmitter and receiver circuits of the data link.
- Placing a solid ground plane next to the high-speed signal layer establishes controlled impedance for transmission line interconnects and provides an excellent low-inductance path for the return current flow.
- Placing the power plane next to the ground plane creates additional high-frequency bypass capacitance of approximately 100pF/in^2.
- Routing the slower speed control signals on the bottom layer allows for greater flexibility as these signal links usually have margin to tolerate discontinuities such as vias.

If an additional supply voltage plane or signal layer is needed, add a second power / ground plane system to the stack to keep it symmetrical. This makes the stack mechanically stable and prevents it from warping. Also the power and ground plane of each power system can be placed closer together, thus increasing the high-frequency bypass capacitance significantly.

For detailed layout recommendations, see Application Note *Digital Isolator Design Guide*, SLLA284.

11.1.1 PCB Material

For digital circuit boards operating below 150 Mbps, (or rise and fall times higher than 1 ns), and trace lengths of up to 10 inches, use standard FR-4 epoxy-glass as PCB material. FR-4 (Flame Retardant 4) meets the requirements of Underwriters Laboratories UL94-V0, and is preferred over cheaper alternatives due to its lower dielectric losses at high frequencies, less moisture absorption, greater strength and stiffness, and its self-extinguishing flammability-characteristics.

11.2 Layout Example

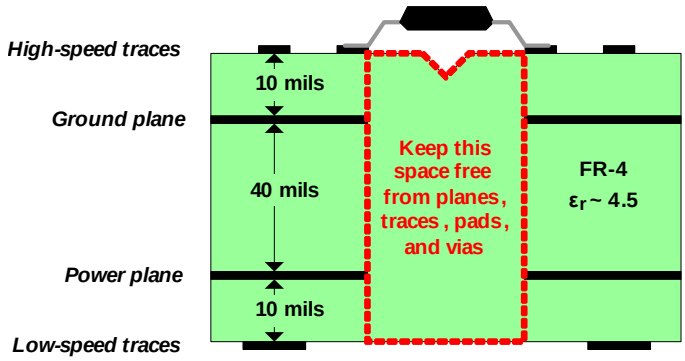

Figure 15. Recommended Layer Stack

Copyright © 2009–2015, Texas Instruments Incorporated

12 Device and Documentation Support

12.1 Documentation Support

12.1.1 Related Documentation

For related documentation, see the following:

- *SN6501 Transformer Driver for Isolated Power Supplies*, SLLSEA0
- *Isolation Glossary*, SLLA353
- *Digital Isolator Design Guide*, SLLA284

12.2 Related Links

The table below lists quick access links. Categories include technical documents, support and community resources, tools and software, and quick access to sample or buy.

Table 3. Related Links

PARTS	PRODUCT FOLDER	SAMPLE & BUY	TECHNICAL DOCUMENTS	TOOLS & SOFTWARE	SUPPORT & COMMUNITY
ISO7420	Click here	Click here	Click here	Click here	Click here
ISO7420M	Click here	Click here	Click here	Click here	Click here
ISO7421	Click here	Click here	Click here	Click here	Click here
ISO7421M	Click here	Click here	Click here	Click here	Click here

12.3 Community Resources

The following links connect to TI community resources. Linked contents are provided "AS IS" by the respective contributors. They do not constitute TI specifications and do not necessarily reflect TI's views; see TI's Terms of Use.

TI E2E™ Online Community ***TI's Engineer-to-Engineer (E2E) Community.*** Created to foster collaboration among engineers. At e2e.ti.com, you can ask questions, share knowledge, explore ideas and help solve problems with fellow engineers.

Design Support ***TI's Design Support*** Quickly find helpful E2E forums along with design support tools and contact information for technical support.

12.4 Trademarks

DeviceNet, E2E are trademarks of Texas Instruments.
All other trademarks are the property of their respective owners.

12.5 Electrostatic Discharge Caution

These devices have limited built-in ESD protection. The leads should be shorted together or the device placed in conductive foam during storage or handling to prevent electrostatic damage to the MOS gates.

12.6 Glossary

SLYZ022 — *TI Glossary*.

This glossary lists and explains terms, acronyms, and definitions.

13 Mechanical, Packaging, and Orderable Information

The following pages include mechanical, packaging, and orderable information. This information is the most current data available for the designated devices. This data is subject to change without notice and revision of this document. For browser-based versions of this data sheet, refer to the left-hand navigation.

PACKAGING INFORMATION

Orderable part number	Status (1)	Material type (2)	Package | Pins	Package qty | Carrier	RoHS (3)	Lead finish/ Ball material (4)	MSL rating/ Peak reflow (5)	Op temp (°C)	Part marking (6)
ISO7420D	Active	Production	SOIC (D) | 8	75 | TUBE	Yes	FULL NIPDAU	Level-1-260C-UNLIM	-40 to 125	IS7420
ISO7420D.A	Active	Production	SOIC (D) | 8	75 | TUBE	Yes	FULL NIPDAU	Level-1-260C-UNLIM	-40 to 125	IS7420
ISO7420D.B	Active	Production	SOIC (D) | 8	75 | TUBE	-	Call TI	Call TI	-40 to 125	
ISO7420DR	Active	Production	SOIC (D) | 8	2500 | LARGE T&R	Yes	FULL NIPDAU	Level-1-260C-UNLIM	-40 to 125	IS7420
ISO7420DR.A	Active	Production	SOIC (D) | 8	2500 | LARGE T&R	Yes	FULL NIPDAU	Level-1-260C-UNLIM	-40 to 125	IS7420
ISO7420DR.B	Active	Production	SOIC (D) | 8	2500 | LARGE T&R	-	Call TI	Call TI	-40 to 125	
ISO7420MD	Active	Production	SOIC (D) | 8	75 | TUBE	Yes	FULL NIPDAU	Level-1-260C-UNLIM	-40 to 125	I7420M
ISO7420MD.A	Active	Production	SOIC (D) | 8	75 | TUBE	Yes	FULL NIPDAU	Level-1-260C-UNLIM	-40 to 125	I7420M
ISO7420MD.B	Active	Production	SOIC (D) | 8	75 | TUBE	-	Call TI	Call TI	-40 to 125	
ISO7420MDR	Active	Production	SOIC (D) | 8	2500 | LARGE T&R	Yes	FULL NIPDAU	Level-1-260C-UNLIM	-40 to 125	I7420M
ISO7420MDR.A	Active	Production	SOIC (D) | 8	2500 | LARGE T&R	Yes	FULL NIPDAU	Level-1-260C-UNLIM	-40 to 125	I7420M
ISO7420MDR.B	Active	Production	SOIC (D) | 8	2500 | LARGE T&R	-	Call TI	Call TI	-40 to 125	
ISO7421D	Active	Production	SOIC (D) | 8	75 | TUBE	Yes	FULL NIPDAU	Level-1-260C-UNLIM	-40 to 125	IS7421
ISO7421D.A	Active	Production	SOIC (D) | 8	75 | TUBE	Yes	FULL NIPDAU	Level-1-260C-UNLIM	-40 to 125	IS7421
ISO7421D.B	Active	Production	SOIC (D) | 8	75 | TUBE	-	Call TI	Call TI	-40 to 125	
ISO7421DR	Active	Production	SOIC (D) | 8	2500 | LARGE T&R	Yes	FULL NIPDAU	Level-1-260C-UNLIM	-40 to 125	IS7421
ISO7421DR.A	Active	Production	SOIC (D) | 8	2500 | LARGE T&R	Yes	FULL NIPDAU	Level-1-260C-UNLIM	-40 to 125	IS7421
ISO7421DR.B	Active	Production	SOIC (D) | 8	2500 | LARGE T&R	-	Call TI	Call TI	-40 to 125	
ISO7421DRG4	Active	Production	SOIC (D) | 8	2500 | LARGE T&R	Yes	FULL NIPDAU	Level-1-260C-UNLIM	-40 to 125	IS7421
ISO7421DRG4.A	Active	Production	SOIC (D) | 8	2500 | LARGE T&R	Yes	FULL NIPDAU	Level-1-260C-UNLIM	-40 to 125	IS7421
ISO7421DRG4.B	Active	Production	SOIC (D) | 8	2500 | LARGE T&R	-	Call TI	Call TI	-40 to 125	

(1) **Status:** For more details on status, see our product life cycle.

(2) **Material type:** When designated, preproduction parts are prototypes/experimental devices, and are not yet approved or released for full production. Testing and final process, including without limitation quality assurance, reliability performance testing, and/or process qualification, may not yet be complete, and this item is subject to further changes or possible discontinuation. If available for ordering, purchases will be subject to an additional waiver at checkout, and are intended for early internal evaluation purposes only. These items are sold without warranties of any kind.

(3) **RoHS values:** Yes, No, RoHS Exempt. See the TI RoHS Statement for additional information and value definition.

(4) **Lead finish/Ball material:** Parts may have multiple material finish options. Finish options are separated by a vertical ruled line. Lead finish/Ball material values may wrap to two lines if the finish value exceeds the maximum column width.

(5) **MSL rating/Peak reflow:** The moisture sensitivity level ratings and peak solder (reflow) temperatures. In the event that a part has multiple moisture sensitivity ratings, only the lowest level per JEDEC standards is shown. Refer to the shipping label for the actual reflow temperature that will be used to mount the part to the printed circuit board.

(6) **Part marking:** There may be an additional marking, which relates to the logo, the lot trace code information, or the environmental category of the part.

Multiple part markings will be inside parentheses. Only one part marking contained in parentheses and separated by a "~" will appear on a part. If a line is indented then it is a continuation of the previous line and the two combined represent the entire part marking for that device.

Important Information and Disclaimer: The information provided on this page represents TI's knowledge and belief as of the date that it is provided. TI bases its knowledge and belief on information provided by third parties, and makes no representation or warranty as to the accuracy of such information. Efforts are underway to better integrate information from third parties. TI has taken and continues to take reasonable steps to provide representative and accurate information but may not have conducted destructive testing or chemical analysis on incoming materials and chemicals. TI and TI suppliers consider certain information to be proprietary, and thus CAS numbers and other limited information may not be available for release.

In no event shall TI's liability arising out of such information exceed the total purchase price of the TI part(s) at issue in this document sold by TI to Customer on an annual basis.

OTHER QUALIFIED VERSIONS OF ISO7421 :

- Enhanced Product : ISO7421-EP

NOTE: Qualified Version Definitions:

- Enhanced Product - Supports Defense, Aerospace and Medical Applications

TAPE AND REEL INFORMATION

REEL DIMENSIONS

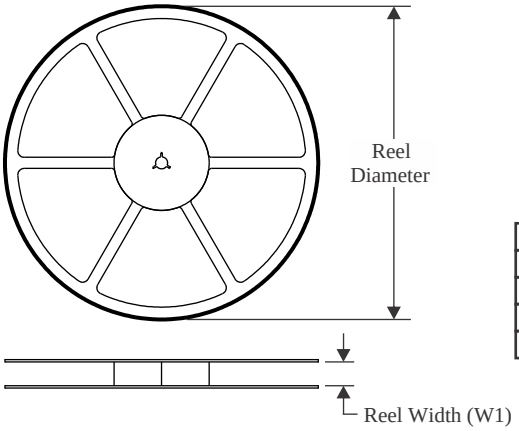

TAPE DIMENSIONS

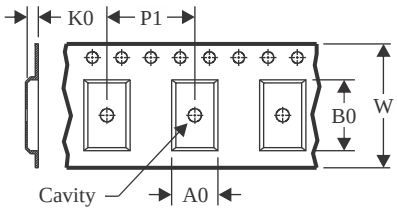

A0	Dimension designed to accommodate the component width
B0	Dimension designed to accommodate the component length
K0	Dimension designed to accommodate the component thickness
W	Overall width of the carrier tape
P1	Pitch between successive cavity centers

QUADRANT ASSIGNMENTS FOR PIN 1 ORIENTATION IN TAPE

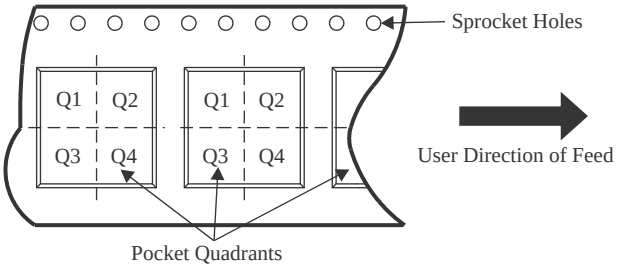

*All dimensions are nominal

Device	Package Type	Package Drawing	Pins	SPQ	Reel Diameter (mm)	Reel Width W1 (mm)	A0 (mm)	B0 (mm)	K0 (mm)	P1 (mm)	W (mm)	Pin1 Quadrant
ISO7420DR	SOIC	D	8	2500	330.0	12.4	6.4	5.2	2.1	8.0	12.0	Q1
ISO7420MDR	SOIC	D	8	2500	330.0	12.4	6.4	5.2	2.1	8.0	12.0	Q1
ISO7421DR	SOIC	D	8	2500	330.0	12.4	6.4	5.2	2.1	8.0	12.0	Q1
ISO7421DRG4	SOIC	D	8	2500	330.0	12.4	6.4	5.2	2.1	8.0	12.0	Q1

TAPE AND REEL BOX DIMENSIONS

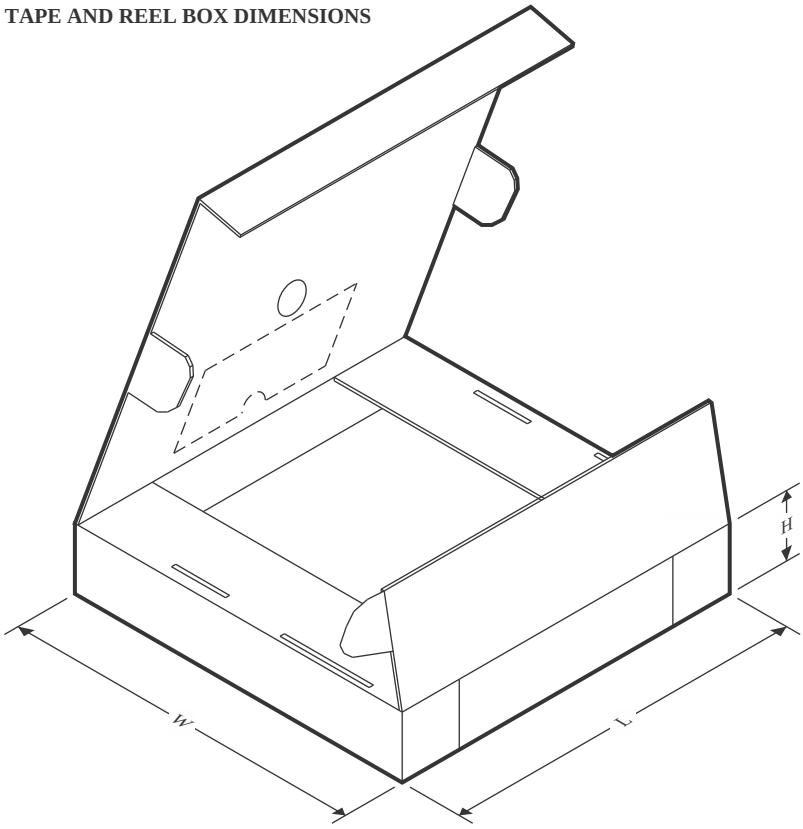

*All dimensions are nominal

Device	Package Type	Package Drawing	Pins	SPQ	Length (mm)	Width (mm)	Height (mm)
ISO7420DR	SOIC	D	8	2500	350.0	350.0	43.0
ISO7420MDR	SOIC	D	8	2500	350.0	350.0	43.0
ISO7421DR	SOIC	D	8	2500	350.0	350.0	43.0
ISO7421DRG4	SOIC	D	8	2500	350.0	350.0	43.0

TUBE

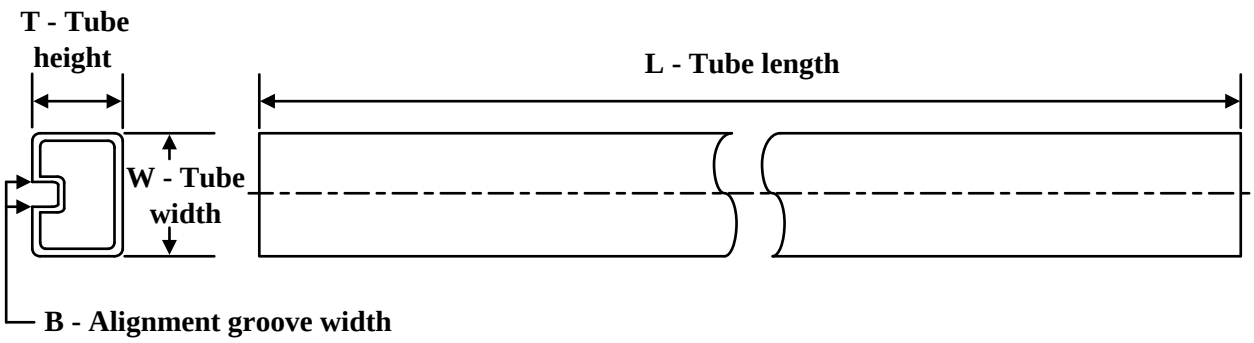

*All dimensions are nominal

Device	Package Name	Package Type	Pins	SPQ	L (mm)	W (mm)	T (µm)	B (mm)
ISO7420D	D	SOIC	8	75	505.46	6.76	3810	4
ISO7420D.A	D	SOIC	8	75	505.46	6.76	3810	4
ISO7420MD	D	SOIC	8	75	505.46	6.76	3810	4
ISO7420MD.A	D	SOIC	8	75	505.46	6.76	3810	4
ISO7421D	D	SOIC	8	75	505.46	6.76	3810	4
ISO7421D.A	D	SOIC	8	75	505.46	6.76	3810	4

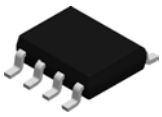

PACKAGE OUTLINE

D0008A

SOIC - 1.75 mm max height

SMALL OUTLINE INTEGRATED CIRCUIT

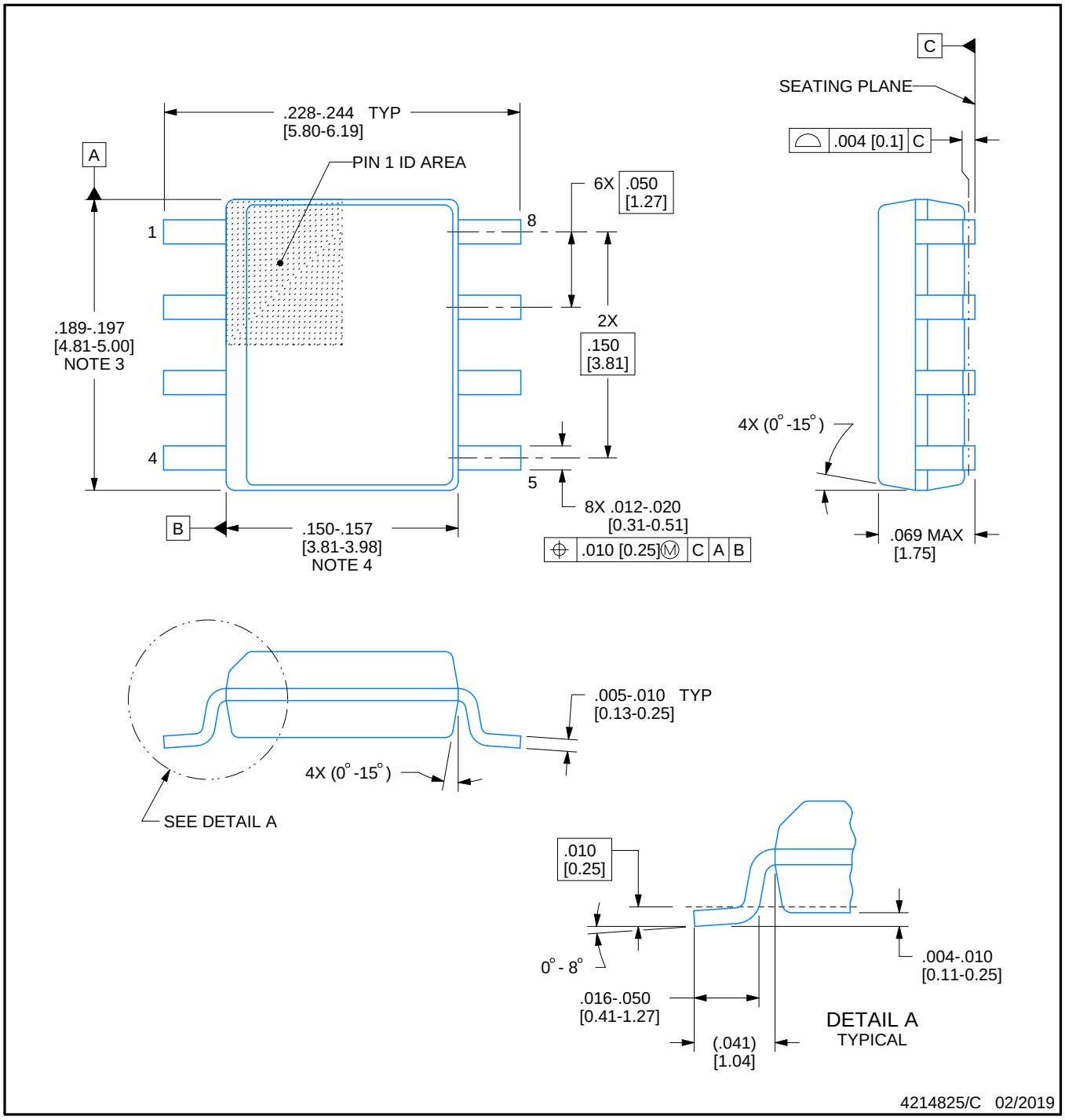

NOTES:

1. Linear dimensions are in inches [millimeters]. Dimensions in parenthesis are for reference only. Controlling dimensions are in inches. Dimensioning and tolerancing per ASME Y14.5M.
2. This drawing is subject to change without notice.
3. This dimension does not include mold flash, protrusions, or gate burrs. Mold flash, protrusions, or gate burrs shall not exceed .006 [0.15] per side.
4. This dimension does not include interlead flash.
5. Reference JEDEC registration MS-012, variation AA.

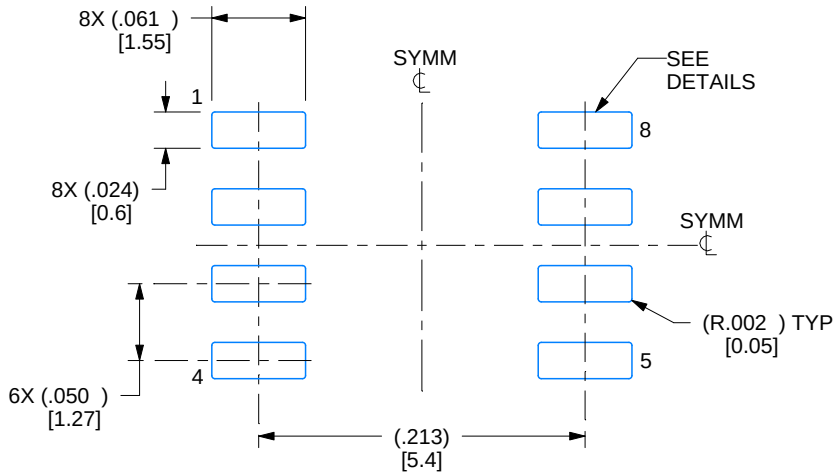

LAND PATTERN EXAMPLE
EXPOSED METAL SHOWN
SCALE:8X

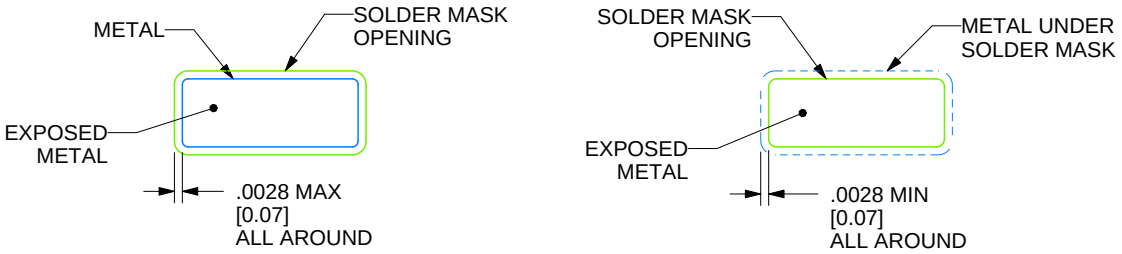

SOLDER MASK DETAILS

4214825/C 02/2019

NOTES: (continued)

6. Publication IPC-7351 may have alternate designs.
7. Solder mask tolerances between and around signal pads can vary based on board fabrication site.

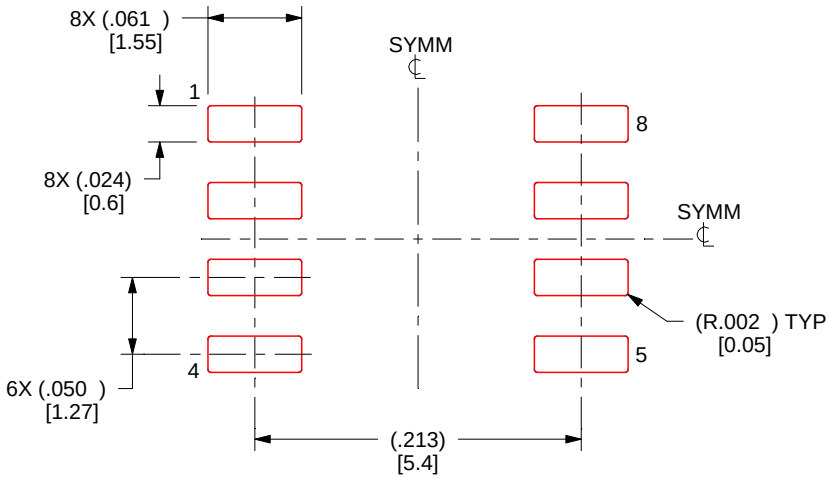

SOLDER PASTE EXAMPLE
BASED ON .005 INCH [0.125 MM] THICK STENCIL
SCALE:8X

4214825/C 02/2019

NOTES: (continued)

8. Laser cutting apertures with trapezoidal walls and rounded corners may offer better paste release. IPC-7525 may have alternate design recommendations.
9. Board assembly site may have different recommendations for stencil design.

IMPORTANT NOTICE AND DISCLAIMER

TI PROVIDES TECHNICAL AND RELIABILITY DATA (INCLUDING DATASHEETS), DESIGN RESOURCES (INCLUDING REFERENCE DESIGNS), APPLICATION OR OTHER DESIGN ADVICE, WEB TOOLS, SAFETY INFORMATION, AND OTHER RESOURCES “AS IS” AND WITH ALL FAULTS, AND DISCLAIMS ALL WARRANTIES, EXPRESS AND IMPLIED, INCLUDING WITHOUT LIMITATION ANY IMPLIED WARRANTIES OF MERCHANTABILITY, FITNESS FOR A PARTICULAR PURPOSE OR NON-INFRINGEMENT OF THIRD PARTY INTELLECTUAL PROPERTY RIGHTS.

These resources are intended for skilled developers designing with TI products. You are solely responsible for (1) selecting the appropriate TI products for your application, (2) designing, validating and testing your application, and (3) ensuring your application meets applicable standards, and any other safety, security, regulatory or other requirements.

These resources are subject to change without notice. TI grants you permission to use these resources only for development of an application that uses the TI products described in the resource. Other reproduction and display of these resources is prohibited. No license is granted to any other TI intellectual property right or to any third party intellectual property right. TI disclaims responsibility for, and you fully indemnify TI and its representatives against any claims, damages, costs, losses, and liabilities arising out of your use of these resources.

TI’s products are provided subject to TI’s Terms of Sale, TI’s General Quality Guidelines, or other applicable terms available either on ti.com or provided in conjunction with such TI products. TI’s provision of these resources does not expand or otherwise alter TI’s applicable warranties or warranty disclaimers for TI products. Unless TI explicitly designates a product as custom or customer-specified, TI products are standard, catalog, general purpose devices.

TI objects to and rejects any additional or different terms you may propose.

Copyright © 2025, Texas Instruments Incorporated

Last updated 10/2025