INA229-Q1 AEC-Q100, 85-V, 20-Bit, Ultra-Precise Power/Energy/Charge Monitor With SPI Interface

1 Features

- AEC-Q100 qualified for automotive applications:
  - Temperature grade 1: –40°C to +125°C, T_A
- Functional Safety-Capable
  - Documentation available to aid functional safety system design
- High-resolution, 20-bit delta-sigma ADC
- Current monitoring accuracy:
  - Offset voltage: ±1 µV (maximum)
  - Offset drift: ±0.01 µV/°C (maximum)
  - Gain error: ±0.05% (maximum)
  - Gain error drift: ±20 ppm/°C (maximum)
  - Common mode rejection: 154 dB (minimum)
- Power monitoring accuracy:
  - 0.5% full scale, –40°C to +125°C (maximum)
- Energy and charge accuracy:
  - 1.0% full scale (maximum)
- Fast alert response: 75 µs
- Wide common-mode range: –0.3 V to +85 V
- Bus voltage sense input: 0 V to 85 V
- Shunt full-scale differential range: ±163.84 mV / ±40.96 mV
- Input bias current: 2.5 nA (maximum)
- Temperature sensor: ±1°C (maximum at 25°C)
- Programmable resistor temperature compensation
- Programmable conversion time and averaging
- 10-MHz SPI communication interface
- Operates from a 2.7-V to 5.5-V supply:
  - Operational current: 640 µA (typical)
  - Shutdown current: 5 µA (maximum)

2 Applications

- Automotive battery management systems
- EV / HEV mA - KA sense applications
- DC/DC converters and power inverters
- ADAS domain controllers

3 Description

The INA229-Q1 is an ultra-precise digital power monitor with a 20-bit delta-sigma ADC specifically designed for current-sensing applications. The device can measure a full-scale differential input of ±163.84 mV or ±40.96 mV across a resistive shunt sense element with common-mode voltage support from –0.3 V to +85 V.

The INA229-Q1 reports current, bus voltage, temperature, power, energy and charge accumulation while employing a precision ±0.5% integrated oscillator, all while performing the needed calculations in the background. The integrated temperature sensor is ±1°C accurate for die temperature measurement and is useful in monitoring the system ambient temperature.

The low offset and gain drift design of the INA229-Q1 allows the device to be used in precise systems that do not undergo multi-temperature calibration during manufacturing. Further, the very low offset voltage and noise allow for use in mA to kA sensing applications and provide a wide dynamic range without significant power dissipation losses on the sensing shunt element. The low input bias current of the device permits the use of larger current-sense resistors, thus providing accurate current measurements in the micro-amp range.

The device allows for selectable ADC conversion times from 50 µs to 4.12 ms as well as sample averaging from 1x to 1024x, which further helps reduce the noise of the measured data.

Device Information(1)

PART NUMBER	PACKAGE	BODY SIZE (NOM)
INA229-Q1	VSSOP (10)	3.00 mm × 3.00 mm

(1) For all available packages, see the package option addendum at the end of the data sheet.

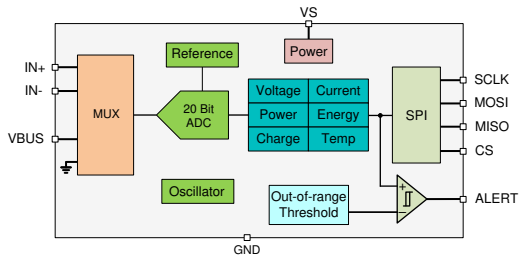

Simplified Block Diagram

An IMPORTANT NOTICE at the end of this data sheet addresses availability, warranty, changes, use in safety-critical applications, intellectual property matters and other important disclaimers. PRODUCTION DATA.

Table of Contents

1 Features....1
2 Applications....1
3 Description....1
4 Revision History....2
5 Pin Configuration and Functions....3
6 Specifications....3
6.1 Absolute Maximum Ratings....3
6.2 ESD Ratings....4
6.3 Recommended Operating Conditions....4
6.4 Thermal Information....4
6.5 Electrical Characteristics....5
6.6 Timing Requirements (SPI)....7
6.7 Timing Diagram....7
6.8 Typical Characteristics....8
7 Detailed Description....12
7.1 Overview....12
7.2 Functional Block Diagram....12
7.3 Feature Description....12
7.4 Device Functional Modes....18
7.5 Programming....18
7.6 Register Maps....20
8 Application and Implementation....30
8.1 Application Information....30
8.2 Typical Application....35
9 Power Supply Recommendations....39
10 Layout....39
10.1 Layout Guidelines....39
10.2 Layout Example....39
11 Device and Documentation Support....40
11.1 Receiving Notification of Documentation Updates....40
11.2 Support Resources....40
11.3 Trademarks....40
11.4 Electrostatic Discharge Caution....40
11.5 Glossary....40
12 Mechanical, Packaging, and Orderable Information....40

4 Revision History

NOTE: Page numbers for previous revisions may differ from page numbers in the current version.

Changes from Revision * (May 2020) to Revision A (June 2021)	Page
• Changed data sheet status from: Advanced Information to: Production Data	1
• Added Functional Safety bullets	1
• Updated the numbering format for tables, figures, and cross-references throughout the document	1
• Updated the figures and equations throughput the document to align with the commercial data sheet	1

Copyright © 2021 Texas Instruments Incorporated

5 Pin Configuration and Functions

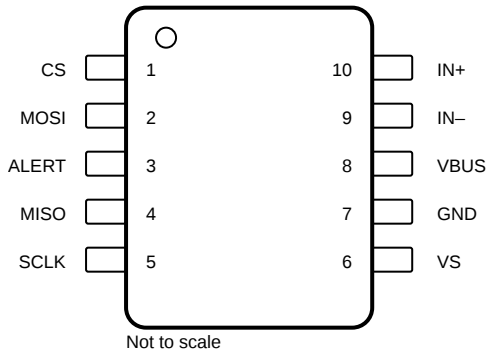

Figure 5-1. DGS Package 10-Pin VSSOP Top View

Table 5-1. Pin Functions

PIN		TYPE	DESCRIPTION
NO.	NAME		
1	CS	Digital input	SPI chip select (Active Low).
2	MOSI	Digital input	SPI digital data input.
3	ALERT	Digital output	Open-drain alert output, default state is active low.
4	MISO	Digital output	SPI digital data output (push-pull).
5	SCLK	Digital input	SPI clock input.
6	VS	Power supply	Power supply, 2.7 V to 5.5 V.
7	GND	Ground	Ground.
8	VBUS	Analog input	Bus voltage input.
9	IN–	Analog input	Negative input to the device. For high-side applications, connect to load side of sense resistor. For low-side applications, connect to ground side of sense resistor.
10	IN+	Analog input	Positive input to the device. For high-side applications, connect to power supply side of sense resistor. For low-side applications, connect to load side of sense resistor.

6 Specifications

6.1 Absolute Maximum Ratings

over operating free-air temperature range (unless otherwise noted)[(1)]

		MIN	MAX	UNIT
V_S	Supply voltage		6	V
V_{IN+}, V_{IN-} [(2)]	Differential (V_{IN+}) – (V_{IN-})	–40	40	V
	Common-mode	–0.3	85	V
V_{VBUS}		–0.3	85	V
V_{IO}	MOSI, MISO, SCLK, ALERT	GND – 0.3	vs. + 0.3	V
I_{IN}	Input current into any pin		5	mA
I_{OUT}	Digital output current		10	mA
T_J	Junction temperature		150	°C
T_{stg}	Storage temperature	–65	150	°C

(1) Stresses beyond those listed under *Absolute Maximum Rating* may cause permanent damage to the device. These are stress ratings only, which do not imply functional operation of the device at these or any other conditions beyond those indicated under *Recommended Operating Condition*. Exposure to absolute-maximum-rated conditions for extended periods may affect device reliability.

(2) VIN+ and VIN– are the voltages at the IN+ and IN– pins, respectively.

Copyright © 2021 Texas Instruments Incorporated

6.2 ESD Ratings

			VALUE	UNIT
$V_{(ESD)}$	Electrostatic discharge	Human body model (HBM), per AEC Q100-002, all pins[1] HBM ESD Classification Level 2	±2000	V
		Charged device model (CDM), per AEC Q100-011, all pins CDM ESD Classification Level C6	±1000	

(1) AEC Q100-002 indicated that HBM stressing shall be in accordance with the ANSI/ESDA/JEDEC JS-001 specification.

6.3 Recommended Operating Conditions

over operating free-air temperature range (unless otherwise noted)

		MIN	NOM	MAX	UNIT
V_{CM}	Common-mode input range	–0.3		85	V
V_S	Operating supply range	2.7		5.5	V
T_A	Ambient temperature	–40		125	°C

6.4 Thermal Information

THERMAL METRIC[1]		INA229-Q1 DGS 10 PINS	UNIT
$R_{\theta JA}$	Junction-to-ambient thermal resistance	177.6	°C/W
$R_{\theta JC(top)}$	Junction-to-case (top) thermal resistance	66.4	°C/W
$R_{\theta JB}$	Junction-to-board thermal resistance	99.5	°C/W
Ψ_{JT}	Junction-to-top characterization parameter	9.7	°C/W
Y_{JB}	Junction-to-board characterization parameter	97.6	°C/W
$R_{\theta JC(bot)}$	Junction-to-case (bottom) thermal resistance	N/A	°C/W

(1) For more information about traditional and new thermal metrics, see the Semiconductor and IC Package Thermal Metrics application report.

Copyright © 2021 Texas Instruments Incorporated

6.5 Electrical Characteristics

at T_A = 25 °C, V_S = 3.3 V, V_{SENSE} = V_{IN+} – $V_{IN–}$ = 0 V, V_{CM} = $V_{IN–}$ = 48 V (unless otherwise noted)

PARAMETER		TEST CONDITIONS	MIN	TYP	MAX	UNIT
INPUT						
V_{CM}	Common-mode input range	T_A = –40 °C to +125 °C	–0.3		85	V
V_{VBUS}	Bus voltage input range		0		85	V
CMRR	Common-mode rejection	–0.3 V < V_{CM} < 85 V, T_A = –40 °C to +125 °C	154	170		dB
V_{DIFF}	Shunt voltage input range	T_A = –40 °C to +125 °C, ADCRANGE = 0	–163.84		163.84	mV
		T_A = –40 °C to +125 °C, ADCRANGE = 1	–40.96		40.96	mV
V_{os}	Shunt offset voltage	V_{CM} = 48 V, T_{CT} > 280 µs		±0.3	±1	µV
		V_{CM} = 0 V, T_{CT} > 280 µs		±0.3	±1	µV
dV_{os}/dT	Shunt offset voltage drift	T_A = –40 °C to +125 °C		±2	±10	nV/°C
PSRR	Shunt offset voltage vs. power supply	V_S = 2.7 V to 5.5 V, T_A = –40 °C to +125 °C		±0.05	±0.5	µV/V
V_{os_bus}	V_{BUS} offset voltage	V_{BUS} = 20 mV		±1	±2.5	mV
dV_{os}/dT	V_{BUS} offset voltage drift	T_A = –40 °C to +125 °C		±4	±20	µV/°C
PSRR	V_{BUS} offset voltage vs. power supply	V_S = 2.7 V to 5.5 V		±0.25		mV/V
I_B	Input bias current	Either input, IN+ or IN–, V_{CM} = 85 V		0.1	2.5	nA
Z_{VBUS}	VBUS pin input impedance	Active mode	0.8	1	1.2	MΩ
I_{VBUS}	VBUS pin leakage current	Shutdown mode, V_{BUS} = 85 V		10		nA
R_{DIFF}	Input differential impedance	Active mode, V_{IN+} – $V_{IN–}$ < 164 mV		92		kΩ
DC ACCURACY						
G_{SERR}	Shunt voltage gain error	V_{CM} = 24 V		±0.01	±0.05	%
G_{S_DRFT}	Shunt voltage gain error drift				±20	ppm/°C
G_{BERR}	V_{BUS} voltage gain error			±0.01	±0.05	%
G_{B_DRFT}	V_{BUS} voltage gain error drift				±20	ppm/°C
P_{TME}	Power total measurment error (TME)	T_A = –40 °C to +125 °C, at full scale			±0.5	%
E_{TME}	Energy and charge TME	at full scale power			±1	%
	ADC resolution			20		Bits
	1 LSB step size	Shunt voltage, ADCRANGE = 0		312.5		nV
		Shunt voltage, ADCRANGE = 1		78.125		nV
		Bus voltage		195.3125		µV
		Temperature		7.8125		m°C
T_{CT}	ADC conversion-time[(1)]	Conversion time field = 0h		50		µs
		Conversion time field = 1h		84		
		Conversion time field = 2h		150		
		Conversion time field = 3h		280		
		Conversion time field = 4h		540		
		Conversion time field = 5h		1052		
		Conversion time field = 6h		2074		
		Conversion time field = 7h		4120		
INL	Integral Non-Linearity			±2		m%
DNL	Differential Non-Linearity			0.2		LSB
CLOCK SOURCE						
F_{OSC}	Internal oscillator frequency			1		MHz
F_{OSC_TOL}	Internal oscillator frequency tolerance	T_A = 25 °C			±0.5	%
		T_A = –40 °C to +125 °C			±1	%

Copyright © 2021 Texas Instruments Incorporated

6.5 Electrical Characteristics (continued)

at T_A = 25 °C, V_S = 3.3 V, V_{SENSE} = V_{IN+} – $V_{IN–}$ = 0 V, V_{CM} = $V_{IN–}$ = 48 V (unless otherwise noted)

PARAMETER		TEST CONDITIONS	MIN	TYP	MAX	UNIT
TEMPERATURE SENSOR						
	Measurement range		–40		+125	°C
	Temperature accuracy	T_A = 25 °C		±0.15	±1	°C
		T_A = –40 °C to +125 °C		±0.2	±2	°C
POWER SUPPLY						
V_S	Supply voltage		2.7		5.5	V
I_Q	Quiescent current	V_{SENSE} = 0 V		640	750	µA
		V_{SENSE} = 0 V, T_A = –40 °C to +125 °C			1.1	mA
I_{QSD}	Quiescent current, shutdown	Shuntdown mode		2.8	5	µA
T_{POR}	Device start-up time	Power-up (NPOR)		300		µs
		From shutdown mode		60		
DIGITAL INPUT / OUTPUT						
V_{IH}	Logic input level, high		1.2		V_S	V
V_{IL}	Logic input level, low		GND		0.4	V
V_{OL}	Logic output level, low	I_{OL} = 1 mA	GND		0.4	V
V_{OH}	Logic output level, high	I_{OL} = 1 mA	V_S – 0.4		V_S	V
I_{IO_LEAK}	Digital leakage input current	0 ≤ V_{IN} ≤ V_S	–1		1	µA

(1) Subject to oscillator accuracy and drift

Copyright © 2021 Texas Instruments Incorporated

6.6 Timing Requirements (SPI)

		MIN	NOM	MAX	UNIT
SERIAL INTERFACE					
f_{SPI}	SPI bit frequency			10	MHz
t_{SCLK_H}	SCLK high time	40			ns
t_{SCLK_L}	SCLK low time	40			ns
t_{CSF_SCLKR}	CS fall to first SCLK rise time	10			ns
t_{SCLKF_CSR}	Last SCLK fall to CS rise time	10			ns
t_{FRM_DLY}	Sequential transfer delay (1)	50			ns
t_{MOSI_RF}	MOSI Rise and Fall time, 10 MHz SCLK			15	ns
t_{MOSI_ST}	MOSI data setup time	10			ns
t_{MOSI_HLD}	MOSI data hold time	20			ns
t_{MISO_RF}	MISO Rise and Fall time, C_{LOAD} = 200 pF			15	ns
t_{MISO_ST}	MISO data setup time	20			ns
t_{MISO_HLD}	MISO data hold time	20			ns
$t_{CS_MISO_DLY}$	CS falling edge to MISO data valid delay time			25	ns
$t_{CS_MISO_HIZ}$	CS rising edge to MISO high impedance delay time			25	ns

(1) Optional. The SPI interface can operate without the CS pin assistance as long as the pin is held low.

6.7 Timing Diagram

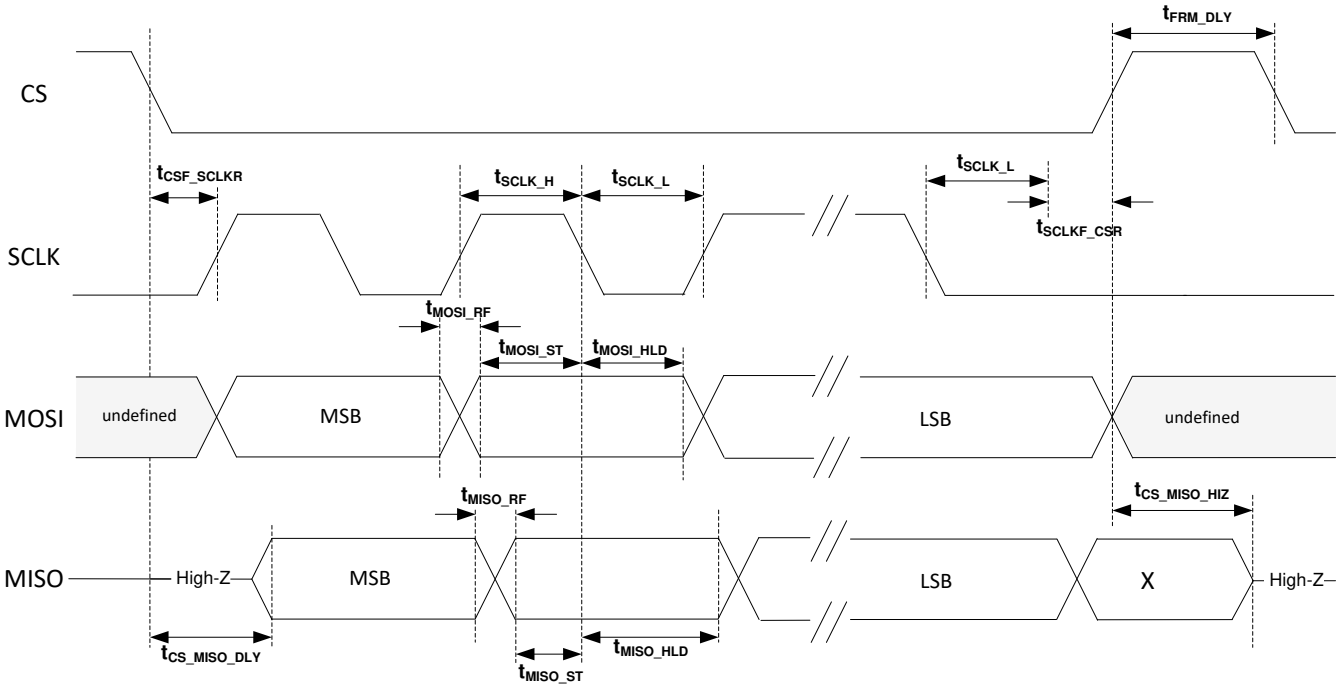

Figure 6-1. SPI Timing Diagram

6.8 Typical Characteristics

at T_A = 25 °C, V_{VS} = 3.3 V, V_{CM} = 48 V, V_{SENSE} = 0, and V_{VBUS} = 48 V (unless otherwise noted)

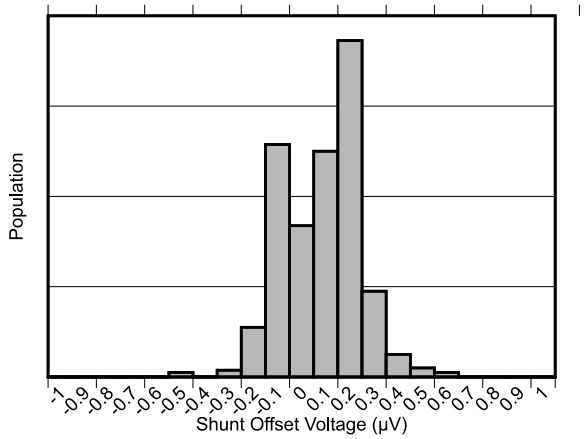

V_{CM} = 48 V

Figure 6-2. Shunt Input Offset Voltage Production Distribution

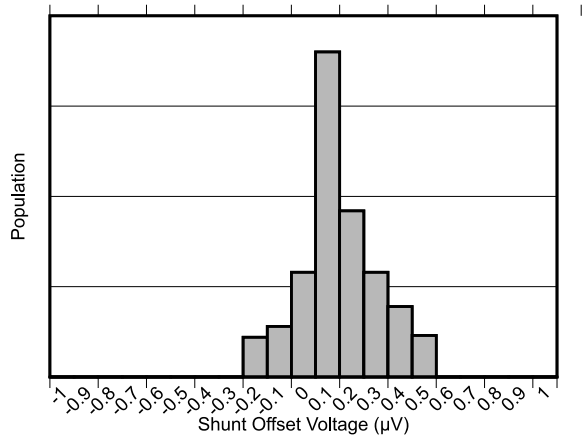

V_{CM} = 0 V

Figure 6-3. Shunt Input Offset Voltage Production Distribution

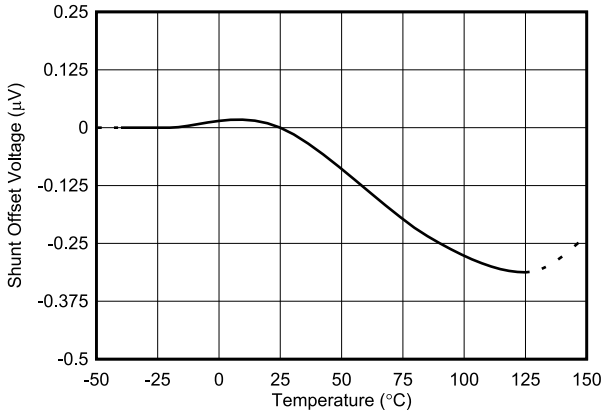

Figure 6-4. Shunt Input Offset Voltage vs. Temperature

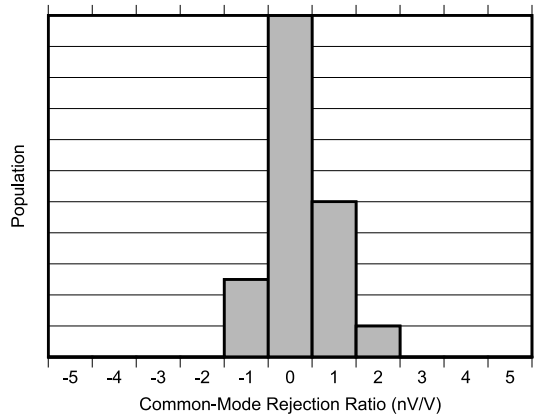

Figure 6-5. Common-Mode Rejection Ratio Production Distribution

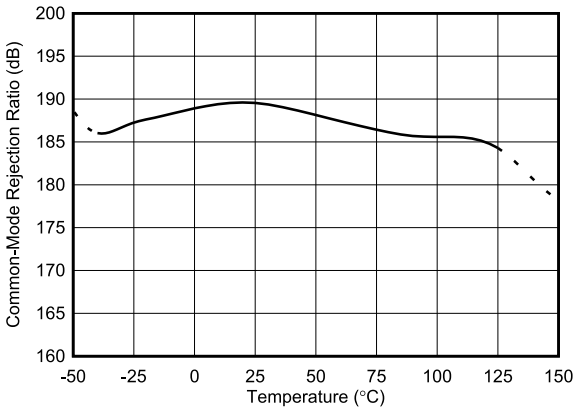

Figure 6-6. Shunt Input Common-Mode Rejection Ratio vs. Temperature

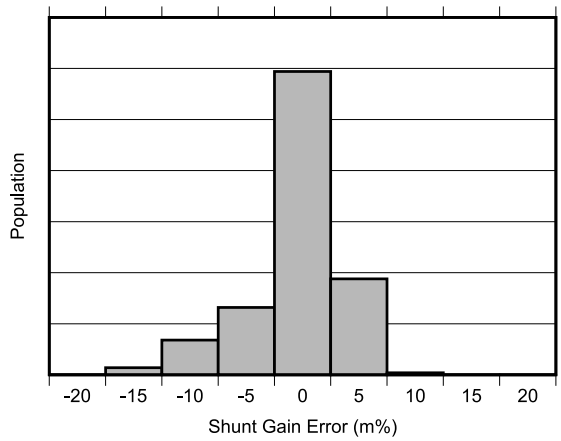

V_{CM} = 24 V

Figure 6-7. Shunt Input Gain Error Production Distribution

Copyright © 2021 Texas Instruments Incorporated

6.8 Typical Characteristics (continued)

at T_A = 25 °C, V_{VS} = 3.3 V, V_{CM} = 48 V, V_{SENSE} = 0, and V_{VBUS} = 48 V (unless otherwise noted)

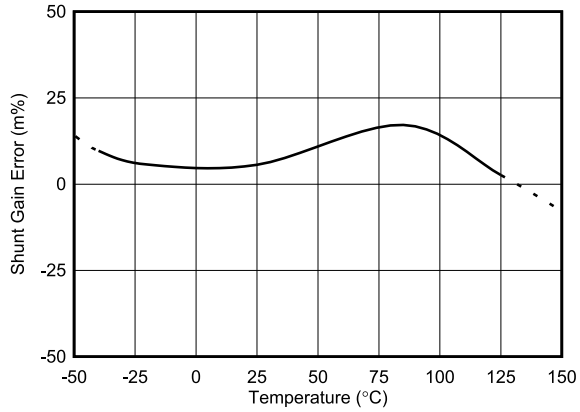

V_{CM} = 24 V

Figure 6-8. Shunt Input Gain Error vs. Temperature

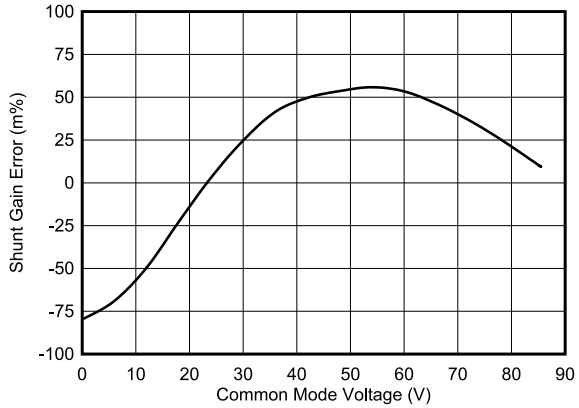

Figure 6-9. Shunt Input Gain Error vs. Common-Mode Voltage

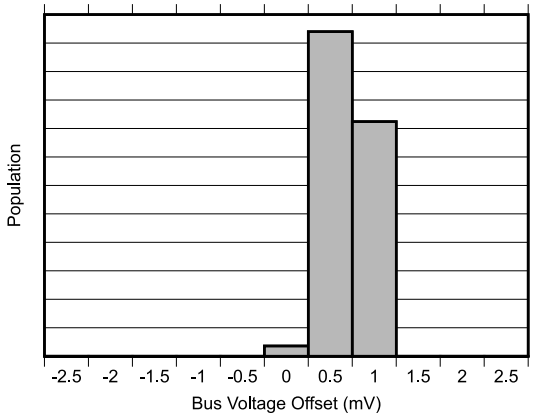

V_{VBUS} = 20 mV

Figure 6-10. Bus Input Offset Voltage Production Distribution

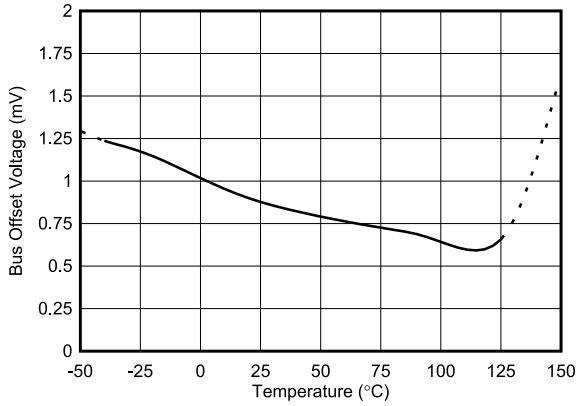

V_{VBUS} = 20 mV

Figure 6-11. Bus Input Offset Voltage vs. Temperature

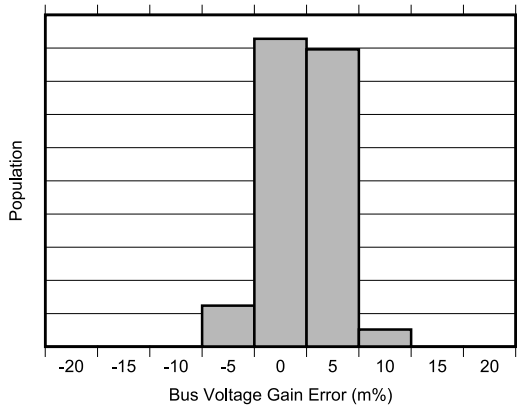

Figure 6-12. Bus Input Gain Error Production Distribution

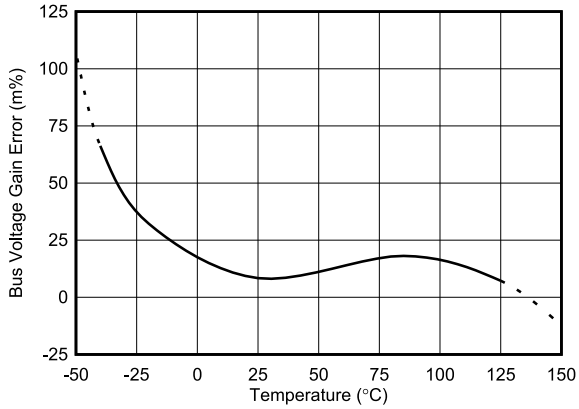

Figure 6-13. Bus Input Gain Error vs. Temperature

6.8 Typical Characteristics (continued)

at T_A = 25 °C, V_{VS} = 3.3 V, V_{CM} = 48 V, V_{SENSE} = 0, and V_{VBUS} = 48 V (unless otherwise noted)

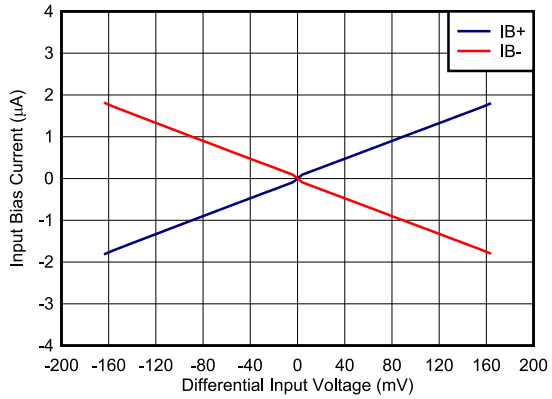

Figure 6-14. Input Bias Current vs. Differential Input Voltage

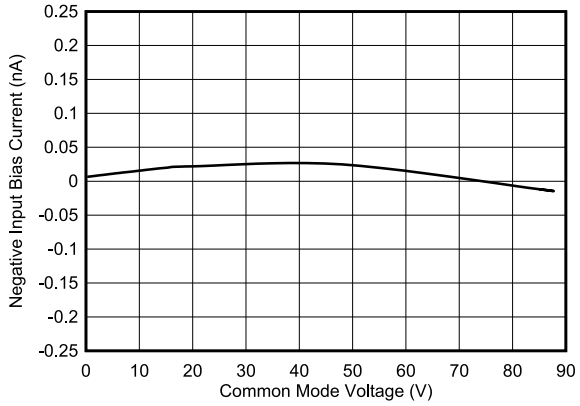

Figure 6-15. Input Bias Current (IB+ or IB–) vs. Common-Mode Voltage

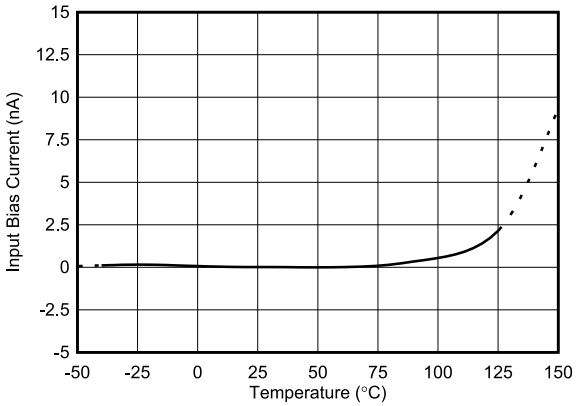

Figure 6-16. Input Bias Current vs. Temperature

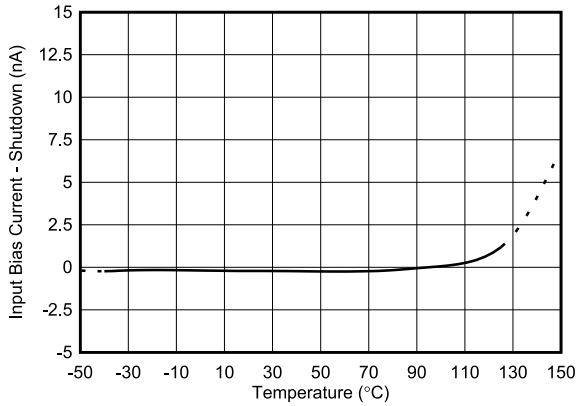

Figure 6-17. Input Bias Current vs. Temperature, Shutdown

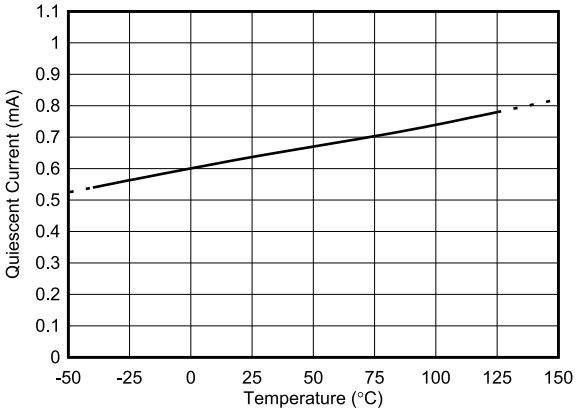

Figure 6-18. Active I_Q vs. Temperature

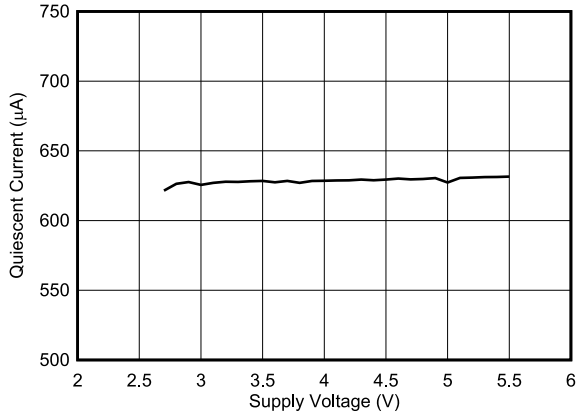

Figure 6-19. Active I_Q vs. Supply Voltage

Copyright © 2021 Texas Instruments Incorporated

6.8 Typical Characteristics (continued)

at T_A = 25 °C, V_{VS} = 3.3 V, V_{CM} = 48 V, V_{SENSE} = 0, and V_{VBUS} = 48 V (unless otherwise noted)

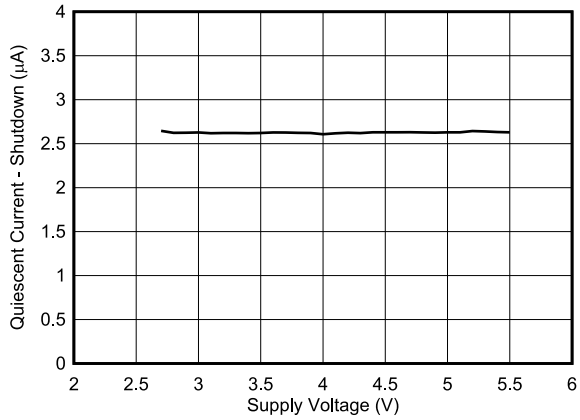

Figure 6-20. Shutdown I_Q vs. Supply Voltage

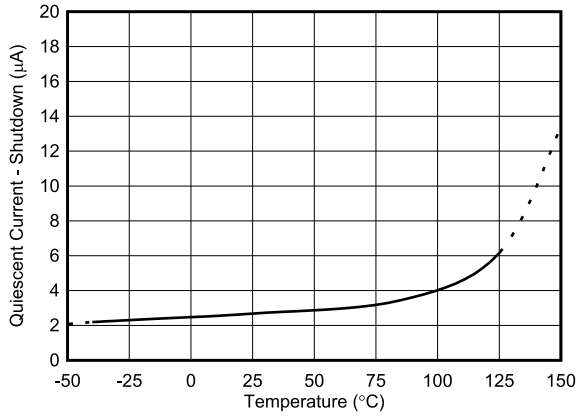

Figure 6-21. Shutdown I_Q vs. Temperature

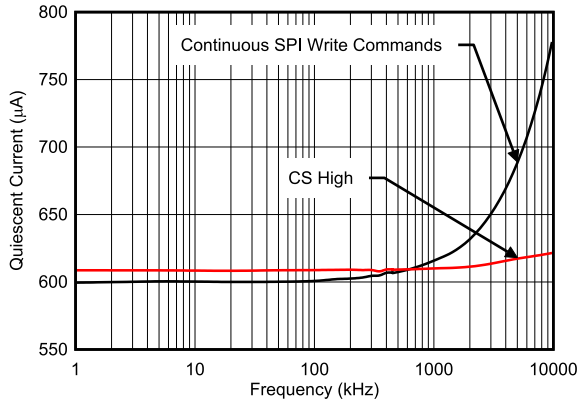

Figure 6-22. Active I_Q vs. Clock Frequency

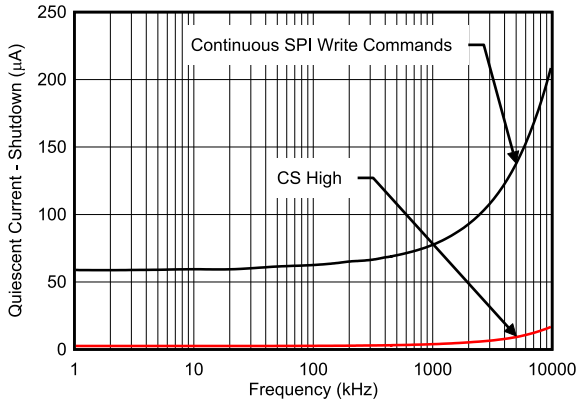

Figure 6-23. Shutdown I_Q vs. Clock Frequency

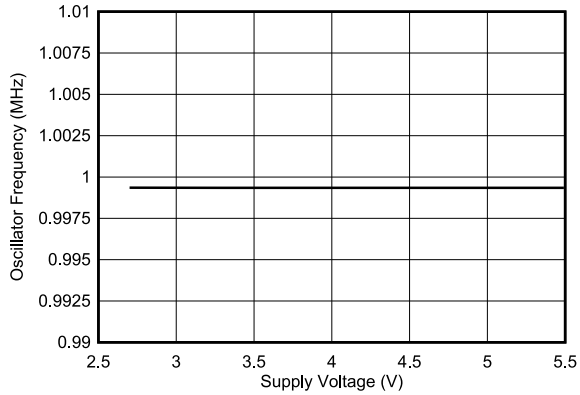

Figure 6-24. Internal Clock Frequency vs. Power Supply

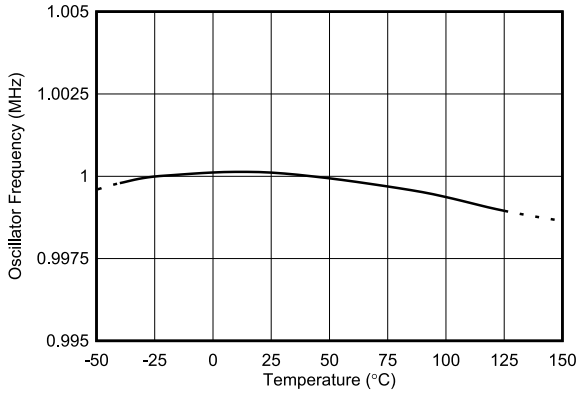

Figure 6-25. Internal Clock Frequency vs. Temperature

7 Detailed Description

7.1 Overview

The INA229-Q1 device is a digital current sense amplifier with a 4-wire SPI digital interface. It measures shunt voltage, bus voltage and internal temperature while calculating current, power, energy and charge necessary for accurate decision making in precisely controlled systems. Programmable registers allow flexible configuration for measurement precision as well as continuous or triggered operation. Detailed register information is found in Section 7.6.

7.2 Functional Block Diagram

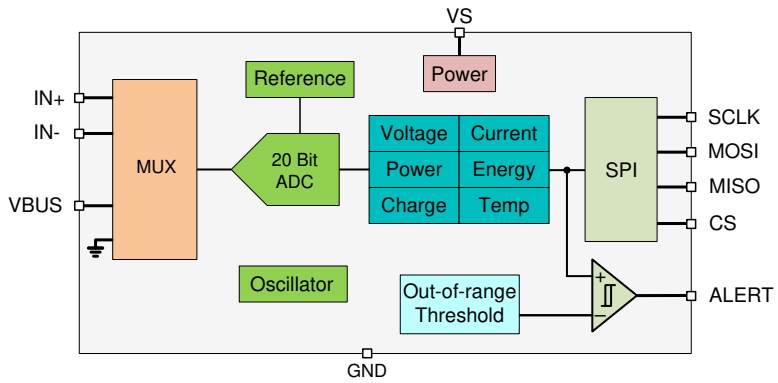

7.3 Feature Description

7.3.1 Versatile High Voltage Measurement Capability

The INA229-Q1 operates off a 2.7 V to 5.5 V supply but can measure voltage and current on rails as high as 85 V. The current is measured by sensing the voltage drop across a external shunt resistor at the IN+ and IN– pins. The input stage of the INA229-Q1 is designed such that the input common-mode voltage can be higher than the device supply voltage, V_S. The supported common-mode voltage range at the input pins is –0.3 V to +85 V, which makes the device well suited for both high-side and low-side current measurements. There are no special considerations for power-supply sequencing because the common-mode input range and device supply voltage are independent of each other; therefore, the bus voltage can be present with the supply voltage off, and vice-versa without damaging the device.

The device also measures the bus supply voltage through the V_{BUS} pin and temperature through the integrated temperature sensor. The differential shunt voltage is measured between the IN+ and IN– pins, while the bus voltage is measured with respect to device ground. Monitored bus voltages can range from 0 V to 85 V, while monitored temperatures can range from -40 ºC to +125 ºC.

Shunt voltage, bus voltage, and temperature measurements are multiplexed internally to a single ADC as shown in Figure 7-1.

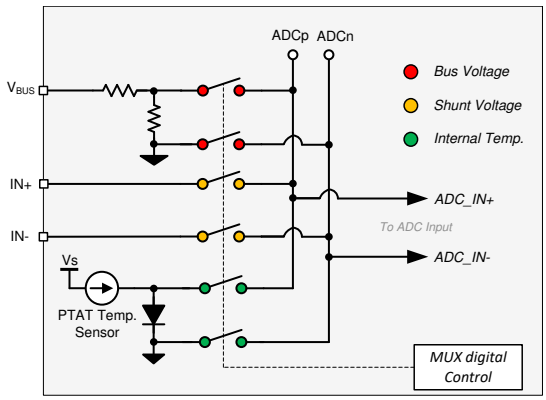

Figure 7-1. High-Voltage Input Multiplexer

Copyright © 2021 Texas Instruments Incorporated

7.3.2 Internal Measurement and Calculation Engine

The current and charge are calculated after a shunt voltage measurement, while the power and energy are calculated after a bus voltage measurement. Power and energy are calculated based on the previous current calculation and the latest bus voltage measurement. If the value loaded into the SHUNT_CAL register is zero, the power, energy and charge values will be reported as zero.

The current, voltage, and temperature values are immediate results when the number of averages is set to one as shown in Figure 7-2. However, when averaging is used, each ADC measurement is an intermediate result which is stored in the corresponding averaging registers. Following every ADC sample, the newly-calculated values for current, voltage, and temperature are appended to their corresponding averaging registers until the set number of averages is achieved. After all of the samples have been measured the average current and voltage is determined, the power is calculated and the results are loaded to the corresponding output registers where they can then be read.

The energy and charge values are accumulated for each conversion cycle. Therefore the INA229-Q1 averaging function is not applied to these.

Calculations for power, charge and energy are performed in the background and do not add to the overall conversion time.

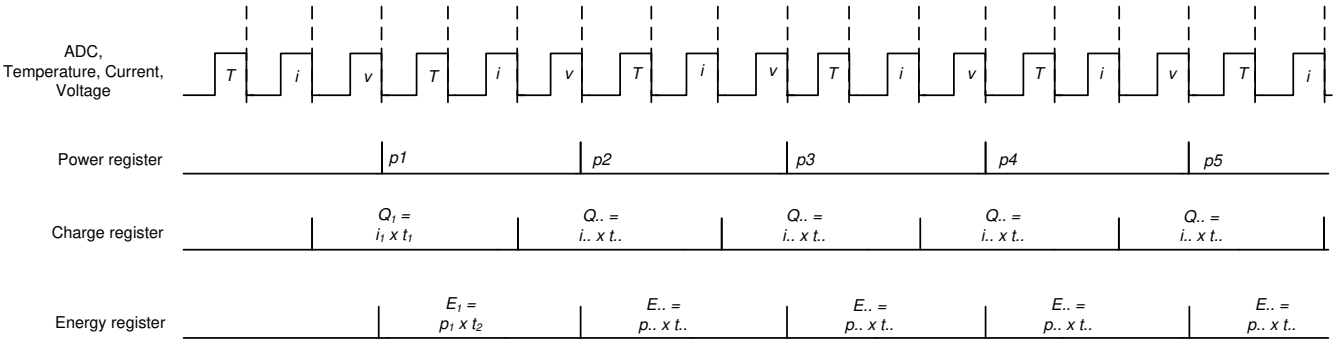

Figure 7-2. Power, Energy and Charge Calculation Scheme

7.3.3 Low Bias Current

The INA229-Q1 features very low input bias current which provides several benefits. The low input bias current of the INA229-Q1 reduces the current consumed by the device in both active and shutdown state. Another benefit of low bias current is that it allows the use of input filters to reject high-frequency noise before the signal is converted to digital data. In traditional digital current-sense amplifiers, the addition of input filters comes at the cost of reduced accuracy. However, as a result of the low bias current, the reduction in accuracy due to input filters is minimized. An additional benefit of low bias current is the ability to use a larger shunt resistor to accurately sense smaller currents. Use of a larger value for the shunt resistor allows the device to accurately monitor currents in the sub-mA range.

The bias current in the INA229-Q1 is the smallest when the sensed current is zero. As the current starts to increase, the differential voltage drop across the shunt resistor increases which results in an increase in the bias current as shown in Input Bias Current vs. Differential Input Voltage.

7.3.4 High-Precision Delta-Sigma ADC

The integrated ADC is a high-performance, low-offset, low-drift, delta-sigma ADC designed to support bidirectional current flow at the shunt voltage measurement channel. The measured inputs are selected through the high-voltage input multiplexer to the ADC inputs as shown in Figure 7-1. The ADC architecture enables lower drift measurement across temperature and consistent offset measurements across the common-mode voltage, temperature, and power supply variations. A low-offset ADC is preferred in current sensing applications to provide a near 0-V offset voltage that maximizes the useful dynamic range of the system.

The INA229-Q1 can measure the shunt voltage, bus voltage, and die temperature, or a combination of any based on the selected MODE bits setting in the ADC_CONFIG register. This permits selecting modes to convert

Copyright © 2021 Texas Instruments Incorporated

only the shunt voltage or bus voltage to further allow the user to configure the monitoring function to fit the specific application requirements. When no averaging is selected, once an ADC conversion is completed, the converted values are independently updated in their corresponding registers where they can be read through the digital interface at the time of conversion end. The conversion time for shunt voltage, bus voltage, and temperature inputs are set independently from 50 µs to 4.12ms depending on the values programmed in the ADC_CONFIG register. Enabled measurement inputs are converted sequentially so the total time to convert all inputs depends on the conversion time for each input and the number of inputs enabled. When averaging is used, the intermediate values are subsequently stored in an averaging accumulator, and the conversion sequence repeats until the number of averages is reached. After all of the averaging has been completed, the final values are updated in the corresponding registers that can then be read. These values remain in the data output registers until they are replaced by the next fully completed conversion results. In this case, reading the data output registers does not affect a conversion in progress.

The ADC has two conversion modes—continuous and triggered—set by the MODE bits in ADC_CONFIG register. In continuous-conversion mode, the ADC will continuously convert the input measurements and update the output registers as described above in an indefinite loop. In triggered-conversion mode, the ADC will convert the input measurements as described above, after which the ADC will go into shutdown mode until another single-shot trigger is generated by writing to the MODE bits. Writing the MODE bits will interrupt and restart triggered or continuous conversions that are in progress. Although the device can be read at any time, and the data from the last conversion remains available, the Conversion Ready flag (CNVRF bit in DIAG_ALRT register) is provided to help coordinate triggered conversions. This bit is set after all conversions and averaging is completed.

The Conversion Ready flag (CNVRF) clears under these conditions:

- Writing to the ADC_CONFIG register (except for selecting shutdown mode); or
- Reading the DIAG_ALRT Register

While the INA229-Q1 device is used in either one of the conversion modes, a dedicated digital engine is calculating the current, power, charge and energy values in the background as described in Section 7.3.2. In triggered mode, the accumulation registers (ENERGY and CHARGE) are invalid, as the device does not keep track of elapsed time. For applications that need critical measurements in regards to accumulation of time for energy and charge measurements, the device must be configured to use continuous conversion mode, as the accumulated results are continuously updated and can provide true system representation of charge and energy consumption in a system. All of the calculations are performed in the background and do not contribute to conversion time.

For applications that must synchronize with other components in the system, the INA229-Q1 conversion can be delayed by programming the CONVDLY bits in CONFIG register in the range between 0 (no delay) and 510 ms. The resolution in programming the conversion delay is 2 ms. The conversion delay is set to 0 by default. Conversion delay can assist in measurement synchronization when multiple external devices are used for voltage or current monitoring purposes. In applications where an time aligned voltage and current measurements are needed, two devices can be used with the current measurement delayed such that the external voltage and current measurements will occur at approximately the same time. Keep in mind that even though the internal time base for the ADC is precise, synchronization will be lost over time due to internal and external time base mismatch.

7.3.4.1 Low Latency Digital Filter

The device integrates a low-pass digital filter that performs both decimation and filtering on the ADC output data, which helps with noise reduction. The digital filter is automatically adjusted for the different output data rates and always settles within one conversion cycle. The user has the flexibility to choose different output conversion time periods T_{CT} from 50 µs to 4.12 ms. With this configuration the first amplitude notch appears at the Nyquist frequency of the output signal which is determined by the selected conversion time period and defined as f_{NOTCH}= 1 / (2 x T_{CT}). This means that the filter cut-off frequency will scale proportionally with the data output rate as described. ADC Frequency Response shows the filter response when the 1.052 ms conversion time period is selected.

Copyright © 2021 Texas Instruments Incorporated

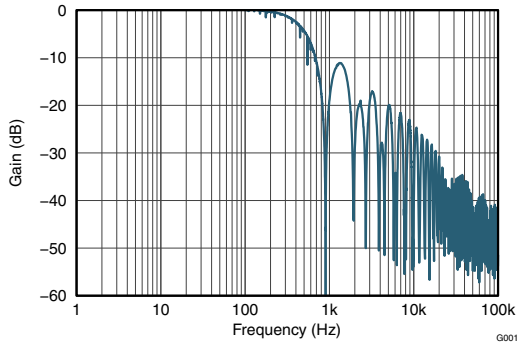

Conversion time = 1.052 ms, single conversion only

Figure 7-3. ADC Frequency Response

7.3.4.2 Flexible Conversion Times and Averaging

ADC conversion times for shunt voltage, bus voltage and temperature can be set independently from 50 µs to 4.12 ms. The flexibility in conversion time allows for robust operation in a variety of noisy environments. The device also allows for programmable averaging times from a single conversion all the way to an average of 1024 conversions. The amount of averaging selected applies uniformly to all active measurement inputs. The ADC_CONFIG register shown in Table 7-6 provides additional details on the supported conversion times and averaging modes. The INA229-Q1 effective resolution of the ADC can be increased by increasing the conversion time and increasing the number of averages. Figure 7-4 and Figure 7-5 shown below illustrate the effect of conversion time and averaging on a constant input signal.

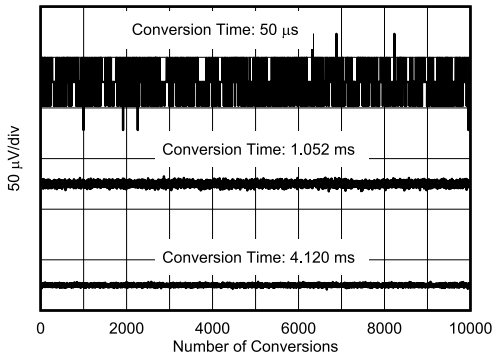

Figure 7-4. Noise vs Conversion Time (Averaging = 1)

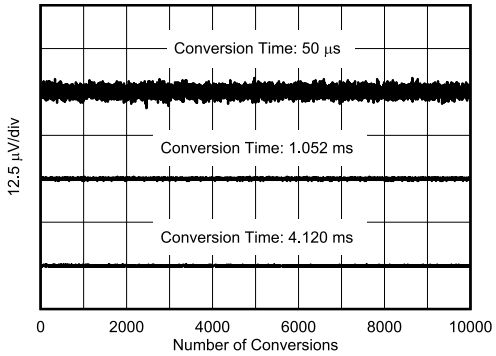

Figure 7-5. Noise vs. Conversion Time (Averaging = 128)

Settings for the conversion time and number of conversions averaged impact the effective measurement resolution. For more detailed information on how averaging reduces noise and increases the effective number of bits (ENOB) see Section 8.1.3.

7.3.5 Shunt Resistor Drift Compensation

The INA229-Q1 device has an internal temperature sensor which can measure die temperature from –40 °C to +125 °C. The accuracy of the temperature sensor is ±2 °C across the operational temperature range. The temperature value is stored inside the DIETEMP register and can be read through the digital interface.

The device has the capability to utilize the temperature measurement to compensate for shunt resistor temperature variance. This feature can be enabled by setting the TEMPCOMP bit in the CONFIG register, while the SHUNT_TEMPCO is the register that can be programmed to enter the temperature coefficient of the used shunt. The full scale value of the SHUNT_TEMPCO register is 16384 ppm/°C. The temperature compensation is referenced to +25 °C . The shunt is always assumed to have a positive temperature coefficient and the temperature compensation follows Equation 1:

$$R_{ADJ} = R_{NOM} + \frac{R_{NOM} \times (DIETEMP - 25) \times SHUNT_TEMPCO}{10^6} \quad (1)$$

where

- R_{NOM} is the nominal shunt resistance in Ohms at 25 °C.
- DIETEMP is the temperature value in the DIETEMP register in °C.
- SHUNT_TEMPCO is the shunt temperature coefficient in ppm/°C.

When this feature is enabled and correctly programmed, the CURRENT register data is corrected by constantly monitoring the die temperature and becomes a function of temperature. The effectiveness of the compensation will depend on how well the resistor and the INA229-Q1 are thermally coupled since the die temperature of the INA229-Q1 is used for the compensation.

Note

Warning: If temperature compensation is enabled under some conditions, the calculated current result may be lower than the actual value. This condition typically occurs when there is a high value of shunt voltage (>70% of full range), there is a shunt with high temperature-coefficient value (>2000 ppm/°C), and there is a high temperature (>100°C). Consider the example of constant current flowing through a high temperature coefficient shunt such that at lower temperatures the shunt voltage is in its upper range. As the temperature increases, the device will correctly report a constant current until the maximum shunt voltage is reached. As temperature continues to increase after the maximum shunt voltage is reached, the device will start reporting lower currents. This is because the effective resistance calculated will continue to increase while the detected shunt voltage will remain constant due to the voltage exceeding the selected ADC range.

7.3.6 Integrated Precision Oscillator

The internal timebase of the device is provided by an internal oscillator that is trimmed to less than 0.5% tolerance at room temperature. The precision oscillator is the timing source for ADC conversions, as well as the time-count used for calculation of energy and charge. The digital filter response varies with conversion time; therefore, the precise clock ensures filter response and notch frequency consistency across temperature. On power up, the internal oscillator and ADC take roughly 300 µs to reach <1% error stability. Once the clock stabilizes, the ADC data output will be accurate to the electrical specifications provided in Section 6.

7.3.7 Multi-Alert Monitoring and Fault Detection

The INA229-Q1 includes a multipurpose, open-drain ALERT output pin that can be used to report multiple diagnostics or as an indicator that the ADC conversion is complete when the device is operating in both triggered and continuous conversion mode. The diagnostics listed in Table 7-1 are constantly monitored and can

Copyright © 2021 Texas Instruments Incorporated

be reported through the ALERT pin whenever the monitored output value crosses its associated out-of-range threshold.

Table 7-1. ALERT Diagnostics Description

INA229-Q1 DIAGNOSTIC	STATUS BIT IN DIAG_ALRT REGISTER (RO)	OUT-OF-RANGE THRESHOLD REGISTER (R/W)	REGISTER DEFAULT VALUE
Shunt Under Voltage Limit	SHNTUL	SUVL	0x8000 h (two's complement)
Shunt Over Voltage Limit	SHNTOL	SOVL	0x7FFF h (two's complement)
Bus Voltage Over-Limit	BUSOL	BOVL	0x7FFF h (two's complement, positive values only)
Bus Voltage Under-Limit	BUSUL	BUVL	0x0000 h (two's complement, positive values only)
Temperature Over-Limit	TMPOL	TEMP_LIMIT	0xFFFF h (two's complement, positive values only)
Power Over-Limit	POL	PWR_LIMIT	0x7FFF h (two's complement)

A read of the DIAG_ALRT register is used to determine which diagnostic has triggered the ALERT pin. This register, shown in Table 7-16, is also used to monitor other associated diagnostics as well as configure some ALERT pin functions.

- Alert latch enable — In case the ALERT pin is triggered, this function will hold the value of the pin even after all diagnostic conditions have cleared. A read of the DIAG_ALRT register will reset the status of the ALERT pin. This function is enabled by setting the ALATCH bit.
- Conversion ready enable — Enables the ALERT pin to assert when an ADC conversion has completed and output values are ready to be read through the digital interface. This function is enabled by setting the CNVR bit. The conversion completed events can also be read through the CNVRF bit regardless of the CNVR bit setting.
- Alert comparison on averaged output — Allows the out-of-range threshold value to be compared to the averaged data values produced by the ADC. This helps to additionally remove noise from the output data when compared to the out-of-range threshold to avoid false alerts due to noise. However, the diagnostic will be delayed due to the time needed for averaging. This function is enabled by setting the SLOWALERT bit.
- Alert polarity — Allows the device to invert the active state of the ALERT pin. Note that the ALERT pin is an open-drain output that must be pulled-up by a resistor. The ALERT pin is active-low by default and can be configured for active high function using the APOL control bit.

Other diagnostic functions that are not reported by the ALERT pin but are available by reading the DIAG_ALRT register:

- Math overflow — Indicated by the MATHOF bit, reports when an arithmetic operation has caused an internal register overflow.
- Memory status — Indicated by the MEMSTAT bit, monitors the health of the device non-volatile trim memory. This bit should always read '1' when the device is operating properly.
- Energy overflow — Indicated by the ENERGYOF bit, reports when the ENERGY register has reached an overflow state due to data accumulation.
- Charge overflow — Indicated by the CHARGEOF bit, reports when the CHARGE register has reached an overflow state due to data accumulation.

When the ALERT pin is configured to report the ADC conversion complete event, the ALERT pin becomes a multipurpose reporting output. Figure 7-6 shows an example where the device reports ADC conversion complete events while the INA229-Q1 device is subject to shunt over voltage (over current) event, bus under voltage event, over temperature event and over power-limit event.

Copyright © 2021 Texas Instruments Incorporated

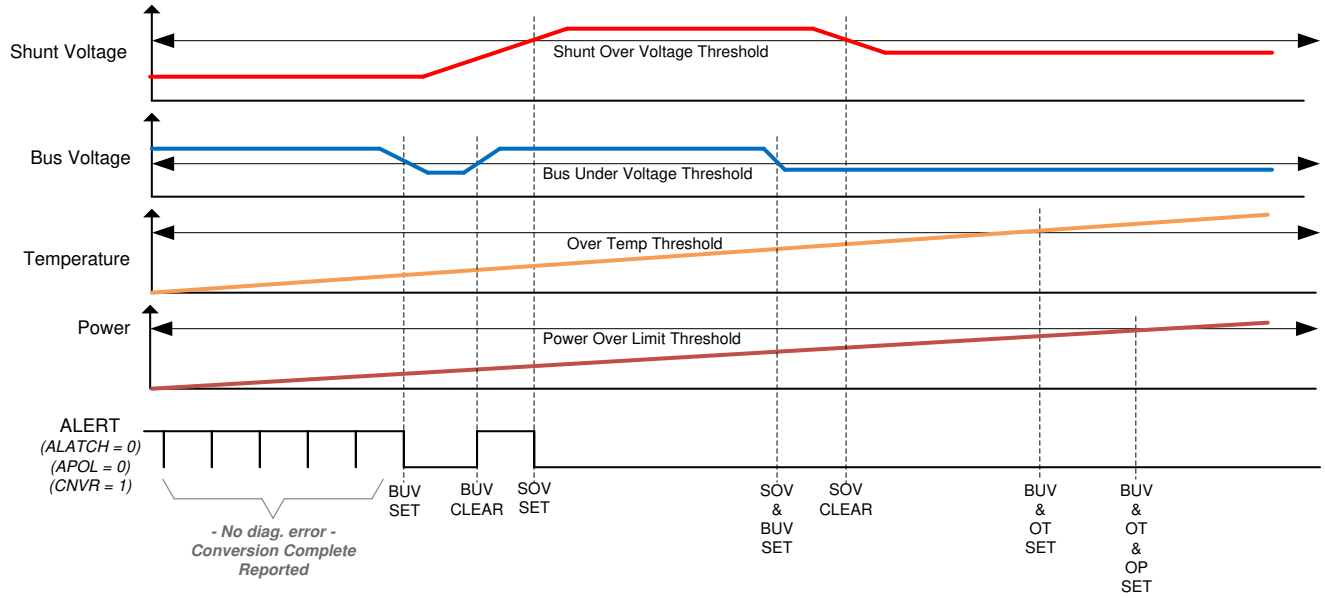

Figure 7-6. Multi-Alert Configuration

7.4 Device Functional Modes

7.4.1 Shutdown Mode

In addition to the two conversion modes (continuous and triggered), the device also has a shutdown mode (selected by the MODE bits in ADC_CONFIG register) that reduces the quiescent current to less than 5 µA and turns off current into the device inputs, reducing the impact of supply drain when the device is not being used. The registers of the device can be written to and read from while the device is in shutdown mode. The device remains in shutdown mode until another triggered conversion command or continuous conversion command is received.

The device can be triggered to perform conversions while in shutdown mode. When a conversion is triggered, the ADC will start conversion; once conversion completes the device will return to the shutdown state.

Note that the shutdown current is specified with an inactive communications bus. Active clock and data activity will increase the current consumption as a function of the bus frequency as shown in Shutdown I_Q vs. Clock Frequency.

7.4.2 Power-On Reset

Power-on reset (POR) is asserted when V_S drops below 1.26V (typical) at which all of the registers are reset to their default values. A manual device reset can be initiated by setting the RST bit in the CONFIG register. The default power-up register values are shown in the reset column for each register description. Links to the register descriptions are shown in Section 7.6.

7.5 Programming

7.5.1 Serial Interface

The primary communication between the INA229-Q1 and the external MCU is through the SPI bus, which provides full-duplex communications in a main-secondary configuration. The external MCU is always the primary or main SPI device, sending command requests on the MOSI pin, and receiving device responses on the MISO pin. The INA229-Q1 is always an SPI secondary device, receiving command requests and sending responses (status, measured values) to the external MCU over the MISO pin.

- SPI is a 4-pin interface with pins as:
  - CS - SPI Chip Select (input)
  - SCLK - SPI Clock (input)
  - MOSI - SPI Secondary In / Main Out data (input)

Copyright © 2021 Texas Instruments Incorporated

  - MISO - SPI Secondary Out / Main In data (tri-state output)
- The SPI frame size is variable in length depending on the INA229-Q1 register accessed through the SPI interface as following:
  - Main to Secondary (MOSI): 6 bits for register Address; 1 bit low; 1 R/W bit (read / not write); variable length of low bits depending on the INA229-Q1 register length.
  - Secondary to Main (MISO): 8 bits low; variable length of bits depending on the INA229-Q1 register length.
- SPI bit-speed up to 10 Mbit/s
- Both Main commands and INA229-Q1 data are shifted MSB first, LSB last
- The data on the MOSI line is sampled on the falling edge of SCLK
- The data on the MISO line is shifted out on the rising edge of SCLK

The SPI communication starts with the CS falling edge, and ends with CS rising edge. The CS high level keeps secondary SPI interface in an idle state, and MISO output is tri-stated.

Since the MISO output is push-pull it is ideal to have the INA229-Q1 supply at the same voltage as the primary device I/O supply. If different supply voltages are used, level translation is recommended.

7.5.1.1 SPI Frame

SPI communication to the INA229-Q1 device is performed through register address access. Communication to every register starts with a 6-bit register address followed by a "0" and a R/W bit. Setting the R/W bit to "1" indicates that the current SPI frame will read from a device register while setting the R/W bit to "0" indicates the current SPI frame will write data to a device register.

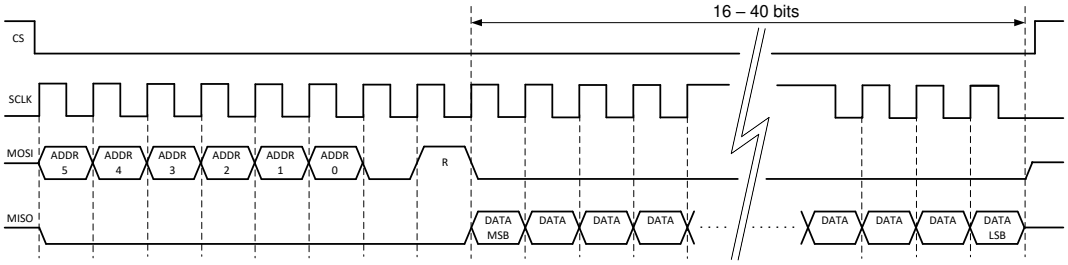

Figure 7-7. SPI Read Frame

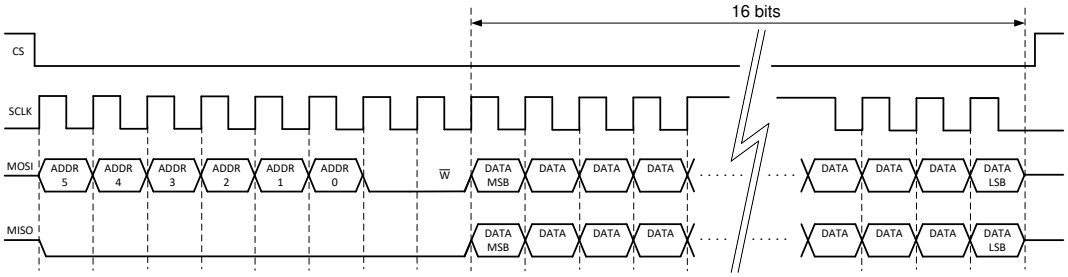

Figure 7-8. SPI Write Frame

Note that while the read frame can be variable in length due to the different length registers in the INA229-Q1 device, the write frame is fixed in length as all writable registers are 16 bits wide. During an SPI write frame, while new data is shifted into the INA229-Q1 register, the old data from the same register is shifted out on the MISO line.

The first 8-bits of each SPI frame are presented in Table 7-2, which shows access to a certain register address on the MOSI line as well as read/write functionality. On an SPI read operation, the INA229-Q1 returns the data read in the same SPI frame.

Table 7-2. First 8-MSB Bits of SPI Frame

COMMAND	b7	b6	b5	b4	b3	b2	b1	b0
READ	ADDR5	ADDR4	ADDR3	ADDR2	ADDR1	ADDR0	0	1
WRITE								0

7.6 Register Maps

7.6.1 INA229-Q1 Registers

Table 7-3 lists the INA229-Q1 registers. All register locations not listed in Table 7-3 should be considered as reserved locations and the register contents should not be modified.

Table 7-3. INA229-Q1 Registers

Address	Acronym	Register Name	Register Size (bits)	Section
0h	CONFIG	Configuration	16	Go
1h	ADC_CONFIG	ADC Configuration	16	Go
2h	SHUNT_CAL	Shunt Calibration	16	Go
3h	SHUNT_TEMPCO	Shunt Temperature Coefficient	16	Go
4h	VSHUNT	Shunt Voltage Measurement	24	Go
5h	VBUS	Bus Voltage Measurement	24	Go
6h	DIETEMP	Temperature Measurement	16	Go
7h	CURRENT	Current Result	24	Go
8h	POWER	Power Result	24	Go
9h	ENERGY	Energy Result	40	Go
Ah	CHARGE	Charge Result	40	Go
Bh	DIAG_ALRT	Diagnostic Flags and Alert	16	Go
Ch	SOVL	Shunt Overvoltage Threshold	16	Go
Dh	SUVL	Shunt Undervoltage Threshold	16	Go
Eh	BOVL	Bus Overvoltage Threshold	16	Go
Fh	BUVL	Bus Undervoltage Threshold	16	Go
10h	TEMP_LIMIT	Temperature Over-Limit Threshold	16	Go
11h	PWR_LIMIT	Power Over-Limit Threshold	16	Go
3Eh	MANUFACTURER_ID	Manufacturer ID	16	Go
3Fh	DEVICE_ID	Device ID	16	Go

Complex bit access types are encoded to fit into small table cells. Table 7-4 shows the codes that are used for access types in this section.

Table 7-4. INA229-Q1 Access Type Codes

Access Type	Code	Description
Read Type		
R	R	Read
Write Type		
W	W	Write
Reset or Default Value		
-n		Value after reset or the default value

7.6.1.1 Configuration (CONFIG) Register (Address = 0h) [reset = 0h]

The CONFIG register is shown in Table 7-5.

Copyright © 2021 Texas Instruments Incorporated

Return to the Summary Table.

Table 7-5. CONFIG Register Field Descriptions

Bit	Field	Type	Reset	Description
15	RST	R/W	0h	Reset Bit. Setting this bit to '1' generates a system reset that is the same as power-on reset. Resets all registers to default values. 0h = Normal Operation 1h = System Reset sets registers to default values This bit self-clears.
14	RSTACC	R/W	0h	Resets the contents of accumulation registers ENERGY and CHARGE to 0 0h = Normal Operation 1h = Clears registers to default values for ENERGY and CHARGE registers
13-6	CONVDLY	R/W	0h	Sets the Delay for initial ADC conversion in steps of 2 ms. 0h = 0 s 1h = 2 ms FFh = 510 ms
5	TEMPCOMP	R/W	0h	Enables temperature compensation of an external shunt 0h = Shunt Temperature Compensation Disabled 1h = Shunt Temperature Compensation Enabled
4	ADCRANGE	R/W	0h	Shunt full scale range selection across IN+ and IN–. 0h = ±163.84 mV 1h = ± 40.96 mV
3-0	RESERVED	R	0h	Reserved. Always reads 0.

Copyright © 2021 Texas Instruments Incorporated

7.6.1.2 ADC Configuration (ADC_CONFIG) Register (Address = 1h) [reset = FB68h]

The ADC_CONFIG register is shown in Table 7-6.

Return to the Summary Table.

Table 7-6. ADC_CONFIG Register Field Descriptions

Bit	Field	Type	Reset	Description
15-12	MODE	R/W	Fh	The user can set the MODE bits for continuous or triggered mode on bus voltage, shunt voltage or temperature measurement. 0h = Shutdown 1h = Triggered bus voltage, single shot 2h = Triggered shunt voltage, single shot 3h = Triggered shunt voltage and bus voltage, single shot 4h = Triggered temperature, single shot 5h = Triggered temperature and bus voltage, single shot 6h = Triggered temperature and shunt voltage, single shot 7h = Triggered bus voltage, shunt voltage and temperature, single shot 8h = Shutdown 9h = Continuous bus voltage only Ah = Continuous shunt voltage only Bh = Continuous shunt and bus voltage Ch = Continuous temperature only Dh = Continuous bus voltage and temperature Eh = Continuous temperature and shunt voltage Fh = Continuous bus voltage, shunt voltage and temperature
11-9	VBUSCT	R/W	5h	Sets the conversion time of the bus voltage measurement: 0h = 50 µs 1h = 84 µs 2h = 150 µs 3h = 280 µs 4h = 540 µs 5h = 1052 µs 6h = 2074 µs 7h = 4120 µs
8-6	VSHCT	R/W	5h	Sets the conversion time of the shunt voltage measurement: 0h = 50 µs 1h = 84 µs 2h = 150 µs 3h = 280 µs 4h = 540 µs 5h = 1052 µs 6h = 2074 µs 7h = 4120 µs
5-3	VTCT	R/W	5h	Sets the conversion time of the temperature measurement: 0h = 50 µs 1h = 84 µs 2h = 150 µs 3h = 280 µs 4h = 540 µs 5h = 1052 µs 6h = 2074 µs 7h = 4120 µs

Copyright © 2021 Texas Instruments Incorporated

Table 7-6. ADC_CONFIG Register Field Descriptions (continued)

Bit	Field	Type	Reset	Description
2-0	AVG	R/W	0h	Selects ADC sample averaging count. The averaging setting applies to all active inputs. When >0h, the output registers are updated after the averaging has completed. 0h = 1 1h = 4 2h = 16 3h = 64 4h = 128 5h = 256 6h = 512 7h = 1024

7.6.1.3 Shunt Calibration (SHUNT_CAL) Register (Address = 2h) [reset = 1000h]

The SHUNT_CAL register is shown in Table 7-7.

Return to the Summary Table.

Table 7-7. SHUNT_CAL Register Field Descriptions

Bit	Field	Type	Reset	Description
15	RESERVED	R	0h	Reserved. Always reads 0.
14-0	SHUNT_CAL	R/W	1000h	The register provides the device with a conversion constant value that represents shunt resistance used to calculate current value in Amperes. This also sets the resolution for the CURRENT register. Value calculation under Section 8.1.2.

7.6.1.4 Shunt Temperature Coefficient (SHUNT_TEMPCO) Register (Address = 3h) [reset = 0h]

The SHUNT_TEMPCO register is shown in Table 7-8.

Return to the Summary Table.

Table 7-8. SHUNT_TEMPCO Register Field Descriptions

Bit	Field	Type	Reset	Description
15-14	RESERVED	R	0h	Reserved. Always reads 0.
13-0	TEMPCO	R/W	0h	Temperature coefficient of the shunt for temperature compensation correction. Calculated with respect to +25 °C. The full scale value of the register is 16383 ppm/°C. The 16 bit register provides a resolution of 1ppm/°C/LSB 0h = 0 ppm/°C 3FFFh = 16383 ppm/°C

7.6.1.5 Shunt Voltage Measurement (VSHUNT) Register (Address = 4h) [reset = 0h]

The VSHUNT register is shown in Table 7-9.

Return to the Summary Table.

Table 7-9. VSHUNT Register Field Descriptions

Bit	Field	Type	Reset	Description
23-4	VSHUNT	R	0h	Differential voltage measured across the shunt output. Two's complement value. Conversion factor: 312.5 nV/LSB when ADCRANGE = 0 78.125 nV/LSB when ADCRANGE = 1
3-0	RESERVED	R	0h	Reserved. Always reads 0.

7.6.1.6 Bus Voltage Measurement (VBUS) Register (Address = 5h) [reset = 0h]

The VBUS register is shown in Table 7-10.

Return to the Summary Table.

Table 7-10. VBUS Register Field Descriptions

Bit	Field	Type	Reset	Description
23-4	VBUS	R	0h	Bus voltage output. Two's complement value, however always positive. Conversion factor: 195.3125 µV/LSB
3-0	RESERVED	R	0h	Reserved. Always reads 0.

Copyright © 2021 Texas Instruments Incorporated

7.6.1.7 Temperature Measurement (DIETEMP) Register (Address = 6h) [reset = 0h]

The DIETEMP register is shown in Table 7-11.

Return to the Summary Table.

Table 7-11. DIETEMP Register Field Descriptions

Bit	Field	Type	Reset	Description
15-0	DIETEMP	R	0h	Internal die temperature measurement. Two's complement value. Conversion factor: 7.8125 m°C/LSB

7.6.1.8 Current Result (CURRENT) Register (Address = 7h) [reset = 0h]

The CURRENT register is shown in Table 7-12.

Return to the Summary Table.

Table 7-12. CURRENT Register Field Descriptions

Bit	Field	Type	Reset	Description
23-4	CURRENT	R	0h	Calculated current output in Amperes. Two's complement value. Value description under Section 8.1.2.
3-0	RESERVED	R	0h	Reserved. Always reads 0.

7.6.1.9 Power Result (POWER) Register (Address = 8h) [reset = 0h]

The POWER register is shown in Table 7-13.

Return to the Summary Table.

Table 7-13. POWER Register Field Descriptions

Bit	Field	Type	Reset	Description
23-0	POWER	R	0h	Calculated power output. Output value in watts. Unsigned representation. Positive value. Value description under Section 8.1.2.

7.6.1.10 Energy Result (ENERGY) Register (Address = 9h) [reset = 0h]

The ENERGY register is shown in Table 7-14.

Return to the Summary Table.

Table 7-14. ENERGY Register Field Descriptions

Bit	Field	Type	Reset	Description
39-0	ENERGY	R	0h	Calculated energy output. Output value is in Joules.Unsigned representation. Positive value. Value description under Section 8.1.2.

7.6.1.11 Charge Result (CHARGE) Register (Address = Ah) [reset = 0h]

The CHARGE register is shown in Table 7-15.

Return to the Summary Table.

Table 7-15. CHARGE Register Field Descriptions

Bit	Field	Type	Reset	Description
39-0	CHARGE	R	0h	Calculated charge output. Output value is in Coulombs.Two's complement value. Value description under Section 8.1.2.

7.6.1.12 Diagnostic Flags and Alert (DIAG_ALRT) Register (Address = Bh) [reset = 0001h]

The DIAG_ALRT register is shown in Table 7-16.

Return to the Summary Table.

Table 7-16. DIAG_ALRT Register Field Descriptions

Bit	Field	Type	Reset	Description
15	ALATCH	R/W	0h	When the Alert Latch Enable bit is set to Transparent mode, the Alert pin and Flag bit reset to the idle state when the fault has been cleared. When the Alert Latch Enable bit is set to Latch mode, the Alert pin and Alert Flag bit remain active following a fault until the DIAG_ALRT Register has been read. 0h = Transparent 1h = Latched
14	CNVR	R/W	0h	Setting this bit high configures the Alert pin to be asserted when the Conversion Ready Flag (bit 1) is asserted, indicating that a conversion cycle has completed. 0h = Disable conversion ready flag on ALERT pin 1h = Enables conversion ready flag on ALERT pin
13	SLOWALERT	R/W	0h	When enabled, ALERT function is asserted on the completed averaged value. This gives the flexibility to delay the ALERT until after the averaged value. 0h = ALERT comparison on non-averaged (ADC) value 1h = ALERT comparison on averaged value
12	APOL	R/W	0h	Alert Polarity bit sets the Alert pin polarity. 0h = Normal (Active-low, open-drain) 1h = Inverted (active-high, open-drain)
11	ENERGYOF	R	0h	This bit indicates the health of the ENERGY register. If the 40 bit ENERGY register has overflowed this bit is set to 1. 0h = Normal 1h = Overflow Clears when the ENERGY register is read.

Copyright © 2021 Texas Instruments Incorporated

Table 7-16. DIAG_ALRT Register Field Descriptions (continued)

Bit	Field	Type	Reset	Description
10	CHARGEOF	R	0h	This bit indicates the health of the CHARGE register. If the 40 bit CHARGE register has overflowed this bit is set to 1. 0h = Normal 1h = Overflow Clears when the CHARGE register is read.
9	MATHOF	R	0h	This bit is set to 1 if an arithmetic operation resulted in an overflow error. It indicates that current and power data may be invalid. 0h = Normal 1h = Overflow Must be manually cleared by triggering another conversion or by clearing the accumulators with the RSTACC bit.
8	RESERVED	R	0h	Reserved. Always read 0.
7	TMPOL	R/W	0h	This bit is set to 1 if the temperature measurement exceeds the threshold limit in the temperature over-limit register. 0h = Normal 1h = Over Temp Event When ALATCH =1 this bit is cleared by reading this register.
6	SHNTOL	R/W	0h	This bit is set to 1 if the shunt voltage measurement exceeds the threshold limit in the shunt over-limit register. 0h = Normal 1h = Over Shunt Voltage Event When ALATCH =1 this bit is cleared by reading this register.
5	SHNTUL	R/W	0h	This bit is set to 1 if the shunt voltage measurement falls below the threshold limit in the shunt under-limit register. 0h = Normal 1h = Under Shunt Voltage Event When ALATCH =1 this bit is cleared by reading this register.
4	BUSOL	R/W	0h	This bit is set to 1 if the bus voltage measurement exceeds the threshold limit in the bus over-limit register. 0h = Normal 1h = Bus Over-Limit Event When ALATCH =1 this bit is cleared by reading this register.
3	BUSUL	R/W	0h	This bit is set to 1 if the bus voltage measurement falls below the threshold limit in the bus under-limit register. 0h = Normal 1h = Bus Under-Limit Event When ALATCH =1 this bit is cleared by reading this register.
2	POL	R/W	0h	This bit is set to 1 if the power measurement exceeds the threshold limit in the power limit register. 0h = Normal 1h = Power Over-Limit Event When ALATCH =1 this bit is cleared by reading this register.
1	CNVRF	R/W	0h	This bit is set to 1 if the conversion is completed. 0h = Normal 1h = Conversion is complete When ALATCH =1 this bit is cleared by reading this register or starting a new triggered conversion.
0	MEMSTAT	R/W	1h	This bit is set to 0 if a checksum error is detected in the device trim memory space. 0h = Memory Checksum Error 1h = Normal Operation

Copyright © 2021 Texas Instruments Incorporated

7.6.1.13 Shunt Overvoltage Threshold (SOVL) Register (Address = Ch) [reset = 7FFFh]

If negative values are entered in this register, then a shunt voltage measurement of 0 V will trip this alarm. When using negative values for the shunt under and overvoltage thresholds be aware that the over voltage threshold must be set to the larger (that is, less negative) of the two values. The SOVL register is shown in Table 7-17.

Return to the Summary Table.

Table 7-17. SOVL Register Field Descriptions

Bit	Field	Type	Reset	Description
15-0	SOVL	R/W	7FFFh	Sets the threshold for comparison of the value to detect Shunt Overvoltage (overcurrent protection). Two's complement value. Conversion Factor: 5 µV/LSB when ADCRANGE = 0 1.25 µV/LSB when ADCRANGE = 1.

7.6.1.14 Shunt Undervoltage Threshold (SUVL) Register (Address = Dh) [reset = 8000h]

The SUVL register is shown in Table 7-18.

Return to the Summary Table.

Table 7-18. SUVL Register Field Descriptions

Bit	Field	Type	Reset	Description
15-0	SUVL	R/W	8000h	Sets the threshold for comparison of the value to detect Shunt Undervoltage (undercurrent protection). Two's complement value. Conversion Factor: 5 µV/LSB when ADCRANGE = 0 1.25 µV/LSB when ADCRANGE = 1.

7.6.1.15 Bus Overvoltage Threshold (BOVL) Register (Address = Eh) [reset = 7FFFh]

The BOVL register is shown in Table 7-19.

Return to the Summary Table.

Table 7-19. BOVL Register Field Descriptions

Bit	Field	Type	Reset	Description
15	Reserved	R	0h	Reserved. Always reads 0.
14-0	BOVL	R/W	7FFFh	Sets the threshold for comparison of the value to detect Bus Overvoltage (overvoltage protection). Unsigned representation, positive value only. Conversion factor: 3.125 mV/LSB.

7.6.1.16 Bus Undervoltage Threshold (BUVL) Register (Address = Fh) [reset = 0h]

The BUVL register is shown in Table 7-20.

Return to the Summary Table.

Table 7-20. BUVL Register Field Descriptions

Bit	Field	Type	Reset	Description
15	Reserved	R	0h	Reserved. Always reads 0.
14-0	BUVL	R/W	0h	Sets the threshold for comparison of the value to detect Bus Undervoltage (undervoltage protection). Unsigned representation, positive value only. Conversion factor: 3.125 mV/LSB.

Copyright © 2021 Texas Instruments Incorporated

7.6.1.17 Temperature Over-Limit Threshold (TEMP_LIMIT) Register (Address = 10h) [reset = 7FFFh]

The TEMP_LIMIT register is shown in Table 7-21.

Return to the Summary Table.

Table 7-21. TEMP_LIMIT Register Field Descriptions

Bit	Field	Type	Reset	Description
15-0	TOL	R/W	7FFFh	Sets the threshold for comparison of the value to detect over temperature measurements. Two's complement value. The value entered in this field compares directly against the value from the DIETEMP register to determine if an over temperature condition exists. Conversion factor: 7.8125 m°C/LSB.

7.6.1.18 Power Over-Limit Threshold (PWR_LIMIT) Register (Address = 11h) [reset = FFFFh]

The PWR_LIMIT register is shown in Table 7-22.

Return to the Summary Table.

Table 7-22. PWR_LIMIT Register Field Descriptions

Bit	Field	Type	Reset	Description
15-0	POL	R/W	FFFFh	Sets the threshold for comparison of the value to detect power over-limit measurements. Unsigned representation, positive value only. The value entered in this field compares directly against the value from the POWER register to determine if an over power condition exists. Conversion factor: 256 × Power LSB.

7.6.1.19 Manufacturer ID (MANUFACTURER_ID) Register (Address = 3Eh) [reset = 5449h]

The MANUFACTURER_ID register is shown in Table 7-23.

Return to the Summary Table.

Table 7-23. MANUFACTURER_ID Register Field Descriptions

Bit	Field	Type	Reset	Description
15-0	MANFID	R	5449h	Reads back TI in ASCII.

7.6.1.20 Device ID (DEVICE_ID) Register (Address = 3Fh) [reset = 2291h]

The DEVICE_ID register is shown in Table 7-24.

Return to the Summary Table.

Table 7-24. DEVICE_ID Register Field Descriptions

Bit	Field	Type	Reset	Description
15-4	DIEID	R	229h	Stores the device identification bits.
3-0	REV_ID	R	1h	Device revision identification.

Copyright © 2021 Texas Instruments Incorporated

8 Application and Implementation

Note

Information in the following applications sections is not part of the TI component specification, and TI does not warrant its accuracy or completeness. TI's customers are responsible for determining suitability of components for their purposes, as well as validating and testing their design implementation to confirm system functionality.

8.1 Application Information

8.1.1 Device Measurement Range and Resolution

The INA229-Q1 device supports two input ranges for the shunt voltage measurement. The supported full scale differential input across the IN+ and IN– pins can be either ±163.84 mV or ±40.96 mV depending on the ADCRANGE bit in CONFIG register. The range for the bus voltage measurement is from 0 V to 85 V. The internal die temperature sensor range extends from –256 °C to +256 °C but is limited by the package to –40 °C to 125 °C.

Table 8-1 provides a description of full scale voltage on shunt, bus, and temperature measurements, along with their associated step size.

Table 8-1. ADC Full Scale Values

PARAMETER	FULL SCALE VALUE	RESOLUTION
Shunt voltage	±163.84 mV (ADCRANGE = 0)	312.5 nV/LSB
	±40.96 mV (ADCRANGE = 1)	78.125 nV/LSB
Bus voltage	0 V to 85 V	195.3125 µV/LSB
Temperature	–40 °C to +125 °C	7.8125 m°C/LSB

The device shunt voltage measurements, bus voltage, and temperature measurements can be read through the VSHUNT, VBUS, and DIETEMP registers, respectively. The digital output in VSHUNT and VBUS registers is 20-bits. The shunt voltage measurement can be positive or negative due to bidirectional currents in the system; therefore the data value in VSHUNT can be positive or negative. The VBUS data value is always positive. The output data can be directly converted into voltage by multiplying the digital value by its respective resolution size. The digital output in the DIETEMP register is 16-bit and can be directly converted to °C by multiplying by the above resolution size. This output value can also be positive or negative.

Furthermore, the device provides the flexibility to report calculated current in Amperes, power in Watts, charge in Coulombs and energy in Joules as described in Section 8.1.2.

8.1.2 Current , Power, Energy, and Charge Calculations

For the INA229-Q1 device to report current values in Ampere units, a constant conversion value must be written in the SHUNT_CAL register that is dependent on the maximum measured current and the shunt resistance used in the application. The SHUNT_CAL register is calculated based on Equation 2. The term CURRENT_LSB is the LSB step size for the CURRENT register where the current in Amperes is stored. The value of CURRENT_LSB is based on the maximum expected current as shown in Equation 3, and it directly defines the resolution of the CURRENT register. While the smallest CURRENT_LSB value yields highest resolution, it is common to select a higher round-number (no higher than 8x) value for the CURRENT_LSB in order to simplify the conversion of the CURRENT.

Copyright © 2021 Texas Instruments Incorporated

The R_{SHUNT} term is the resistance value of the external shunt used to develop the differential voltage across the IN+ and IN– pins. Use Equation 2 for ADCRANGE = 0. For ADCRANGE = 1, the value of SHUNT_CAL must be multiplied by 4.

$$\text{SHUNT_CAL} = 13107.2 \times 10^6 \times \text{CURRENT_LSB} \times R_{SHUNT} \tag{2}$$

where

- 13107.2×10^6 is an internal fixed value used to ensure scaling is maintained properly.
- the value of SHUNT_CAL must be multiplied by 4 for ADCRANGE = 1.

$$\text{CURRENT_LSB} = \frac{\text{Maximum Expected Current}}{2^{19}} \tag{3}$$

Note that the current is calculated following a shunt voltage measurement based on the value set in the SHUNT_CAL register. If the value loaded into the SHUNT_CAL register is zero, the current value reported through the CURRENT register is also zero.

After programming the SHUNT_CAL register with the calculated value, the measured current in Amperes can be read from the CURRENT register. The final value is scaled by CURRENT_LSB and calculated in Equation 4:

$$\text{Current [A]} = \text{CURRENT_LSB} \times \text{CURRENT} \tag{4}$$

where

- CURRENT is the value read from the CURRENT register

The power value can be read from the POWER register as a 24-bit value and converted to Watts by using Equation 5:

$$\text{Power [W]} = 3.2 \times \text{CURRENT_LSB} \times \text{POWER} \tag{5}$$

where

- POWER is the value read from the POWER register.
- CURRENT_LSB is the lsb size of the current calculation as defined by Equation 3.

The energy value can be read from the ENERGY register as a 40-bit unsigned value in Joules units. The energy value in Joules is converted by using Equation 6:

$$\text{Energy [J]} = 16 \times 3.2 \times \text{CURRENT_LSB} \times \text{ENERGY} \tag{6}$$

The charge value can be read from the CHARGE register as a 40-bit, two's complement value in Coulombs. The charge value in Coulomb is converted by using Equation 7:

$$\text{Charge [C]} = \text{CURRENT_LSB} \times \text{CHARGE} \tag{7}$$

where

- CHARGE is the value read from the CHARGE register.
- CURRENT_LSB is the lsb size of the current calculation as described in Equation 3.

Upon overflow, the ENERGY and CHARGE registers will roll over and start from zero. The register values can also be reset at any time by setting the RSTACC bit in the CONFIG register.

For a design example using these equations refer to Section 8.2.2.

8.1.3 ADC Output Data Rate and Noise Performance

The INA229-Q1 noise performance and effective resolution depend on the ADC conversion time. The device also supports digital averaging which can further help decrease digital noise. The flexibility of the device to select ADC conversion time and data averaging offers increased signal-to-noise ratio and achieves the highest dynamic range with lowest offset. The profile of the noise at lower signals levels is dominated by the system noise that is comprised mainly of 1/f noise or white noise. The INA229-Q1 effective resolution of the ADC can be increased by increasing the conversion time and increasing the number of averages.

Table 8-2 summarizes the output data rate conversion settings supported by the device. The fastest conversion setting is 50 µs. Typical noise-free resolution is represented as Effective Number of Bits (ENOB) based on device measured data. The ENOB is calculated based on noise peak-to-peak values, which assures that full noise distribution is taken into consideration.

Table 8-2. INA229-Q1 Noise Performance

ADC CONVERSION TIME PERIOD [µs]	OUTPUT SAMPLE AVERAGING [SAMPLES]	OUTPUT SAMPLE PERIOD [ms]	NOISE-FREE ENOB (±163.84-mV) (ADCRANGE = 0)	NOISE-FREE ENOB (±40.96-mV) (ADCRANGE = 1)
50	1	0.05	12.4	10.4
84		0.084	12.6	10.4
150		0.15	13.3	11.4
280		0.28	13.8	11.8
540		0.54	14.2	12.4
1052		1.052	14.5	12.6
2074		2.074	15.3	13.3
4120		4.12	16.0	13.8
50	4	0.2	13.1	11.4
84		0.336	13.9	11.8
150		0.6	14.3	12.2
280		1.12	14.9	12.8
540		2.16	15.1	13.0
1052		4.208	15.8	13.8
2074		8.296	16.1	14.3
4120		16.48	16.5	14.4

Copyright © 2021 Texas Instruments Incorporated

Table 8-2. INA229-Q1 Noise Performance (continued)

ADC CONVERSION TIME PERIOD [µs]	OUTPUT SAMPLE AVERAGING [SAMPLES]	OUTPUT SAMPLE PERIOD [ms]	NOISE-FREE ENOB (±163.84-mV) (ADCRANGE = 0)	NOISE-FREE ENOB (±40.96-mV) (ADCRANGE = 1)
50	16	0.8	13.9	12.3
84		1.344	14.7	12.9
150		2.4	15.1	13.0
280		4.48	15.8	13.7
540		8.64	16.3	14.3
1052		16.832	16.5	14.6
2074		33.184	17.1	15.3
4120		65.92	17.7	15.9
50	64	3.2	15.0	13.3
84		5.376	15.9	13.8
150		9.6	16.4	14.4
280		17.92	16.9	14.5
540		34.56	17.7	15.3
1052		67.328	17.7	15.9
2074		132.736	18.1	16.3
4120		263.68	18.7	16.5
50	128	6.4	15.5	13.4
84		10.752	16.3	14.3
150		19.2	16.9	14.7
280		35.84	17.1	15.2
540		69.12	18.1	15.9
1052		134.656	18.1	16.4
2074		265.472	18.7	16.9
4120		527.36	19.7	17.1
50	256	12.8	15.5	14.4
84		21.504	16.7	14.7
150		38.4	17.4	15.3
280		71.68	17.7	15.7
540		138.24	18.7	16.1
1052		269.312	18.7	16.7
2074		530.944	19.7	17.4
4120		1054.72	19.7	17.7
50	512	25.6	16.7	14.3
84		43	17.4	15.4
150		76.8	17.7	15.5
280		143.36	18.7	16.3
540		276.48	18.7	16.5
1052		538.624	19.7	17.4
2074		1061.888	19.7	17.7
4120		2109.44	19.7	18.7

Copyright © 2021 Texas Instruments Incorporated

Table 8-2. INA229-Q1 Noise Performance (continued)

ADC CONVERSION TIME PERIOD [µs]	OUTPUT SAMPLE AVERAGING [SAMPLES]	OUTPUT SAMPLE PERIOD [ms]	NOISE-FREE ENOB (±163.84-mV) (ADCRANGE = 0)	NOISE-FREE ENOB (±40.96-mV) (ADCRANGE = 1)
50	1024	51.2	17.1	15.0
84		86.016	17.7	15.9
150		153.6	18.1	16.0
280		286.72	18.7	16.9
540		552.96	19.7	17.1
1052		1077.248	19.7	17.7
2074		2123.776	19.7	18.1
4120		4218.88	20	18.7

8.1.4 Input Filtering Considerations

As previously discussed, INA229-Q1 offers several options for noise filtering by allowing the user to select the conversion times and number of averages independently in the ADC_CONFIG register. The conversion times can be set independently for the shunt voltage and bus voltage measurements to allow added flexibility in monitoring of the power-supply bus.

The internal ADC has good inherent noise rejection; however, the transients that occur at or very close to the sampling rate harmonics can cause problems. Because these signals are at 1 MHz and higher, they can be managed by incorporating filtering at the input of the device. Filtering high frequency signals enables the use of low-value series resistors on the filter with negligible effects on measurement accuracy. For best results, filter using the lowest possible series resistance (typically 100 Ω or less) and a ceramic capacitor. Recommended values for this capacitor are between 0.1 µF and 1 µF. Figure 8-1 shows the device with a filter added at the input.

Overload conditions are another consideration for the device inputs. The device inputs are specified to tolerate ±40 V differential across the IN+ and IN– pins. A large differential scenario might be a short to ground on the load side of the shunt. This type of event can result in full power-supply voltage across the shunt (as long the power supply or energy storage capacitors support it). Removing a short to ground can result in inductive kickbacks that could exceed the 40-V differential or 85-V common-mode absolute maximum rating of the device. Inductive kickback voltages are best controlled by Zener-type transient-absorbing devices (commonly called *transzorbs*) combined with sufficient energy storage capacitance. See the *Transient Robustness for Current Shunt Monitors* reference design which describes a high-side current shunt monitor used to measure the voltage developed across a current-sensing resistor when current passes through it.

In applications that do not have large energy storage, electrolytic capacitors on one or both sides of the shunt, an input overstress condition may result from an excessive dV/dt of the voltage applied to the input. A hard physical short is the most likely cause of this event. This problem occurs because an excessive dV/dt can activate the ESD protection in the device in systems where large currents are available. Testing demonstrates that the addition of 10-Ω resistors in series with each input of the device sufficiently protects the inputs against this dV/dt failure up to the 40-V maximum differential voltage rating of the device. Selecting these resistors in the range noted has minimal effect on accuracy.

Copyright © 2021 Texas Instruments Incorporated

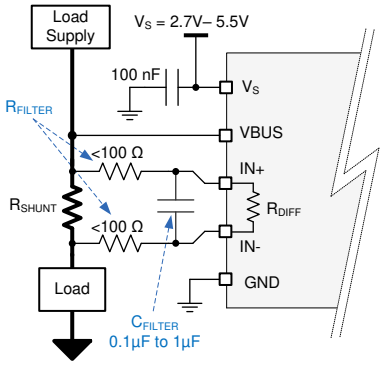

Figure 8-1. Input Filtering

Do not use values greater than 100 ohms for R_{FILTER}. Doing so will degrade gain error and increase non-linearity.

8.2 Typical Application

The low offset voltage and low input bias current of the INA229-Q1 allow accurate monitoring of a wide range of currents. To accurately monitor currents with high resolution, select the value of the shunt resistor so that the resulting sense voltage is close to the maximum allowable differential input voltage range (either ±163.84 mV or ±40.96 mV, depending on register settings). The circuit for monitoring currents in a high-side configuration is shown in Figure 8-2.

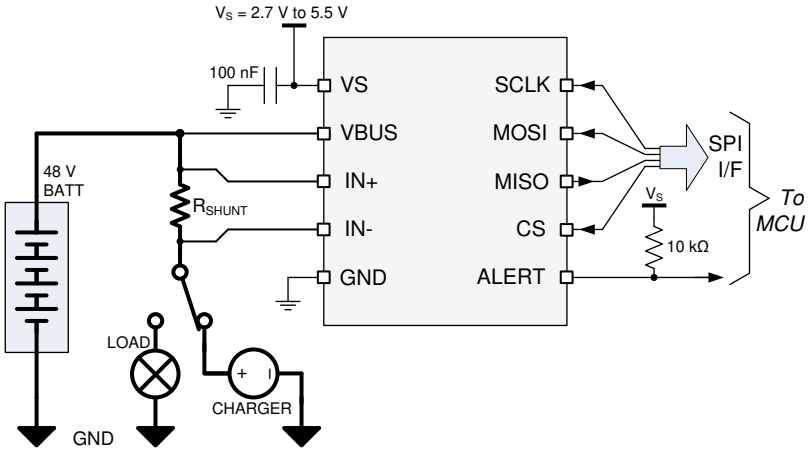

Figure 8-2. INA229-Q1 High-Side Sensing Application Diagram

8.2.1 Design Requirements

The INA229-Q1 measures the voltage developed across a current-sensing resistor (R_{SHUNT}) when current passes through it. The device also measures the bus supply voltage and calculates power when calibrated. It also comes with alert capability, where the alert pin can be programmed to respond to a user-defined event or a conversion ready notification.

The design requirements for the circuit shown in Figure 8-2 are listed in Table 8-3.

Table 8-3. Design Parameters

DESIGN PARAMETER	EXAMPLE VALUE
Power-supply voltage (V_S)	5 V
Bus supply rail (V_{CM})	48 V
Bus supply rail over voltage fault threshold	52 V
Average Current	6 A
Overcurrent fault threshold (I_{MAX})	10 A

Table 8-3. Design Parameters (continued)

DESIGN PARAMETER	EXAMPLE VALUE
ADC Range Selection (V_{SENSE_MAX})	±163.84 mV
Temperature	25 ºC
Charge Accumulation Period	1 hour

8.2.2 Detailed Design Procedure

8.2.2.1 Select the Shunt Resistor

Using values from Table 8-3, the maximum value of the shunt resistor is calculated based on the value of the maximum current to be sensed (I_{MAX}) and the maximum allowable sense voltage (V_{SENSE_MAX}) for the chosen ADC range. When operating at the maximum current, the differential input voltage must not exceed the maximum full scale range of the device, V_{SENSE_MAX}. Using Equation 8 for the given design parameters, the maximum value for R_{SHUNT} is calculated to be 16.38 mΩ. The closest standard resistor value that is smaller than the maximum calculated value is 16.2 mΩ. Also keep in mind that R_{SHUNT} must be able to handle the power dissipated across it in the maximum load condition.

$$R_{SHUNT} < \frac{V_{SENSE_MAX}}{I_{MAX}} \tag{8}$$

8.2.2.2 Configure the Device

The first step to program the INA229-Q1 is to properly set the device and ADC configuration registers. On initial power up the CONFIG and ADC_CONFIG registers are set to the reset values as shown in Table 7-5 and Table 7-6. In this default power on state the device is set to measured on the ±163.84 mV range with the ADC continuously converting the shunt voltage, bus voltage, and temperature. If the default power up conditions do not meet the design requirements, these registers will need to be set properly after each V_S power cycle event.

8.2.2.3 Program the Shunt Calibration Register

The shunt calibration register needs to be correctly programmed at each V_S power up in order for the device to properly report any result based on current. The first step in properly setting this register is to calculate the LSB value for the current by using Equation 3. Applying this equation with the maximum expected current of 10 A results in an LSB size of 19.0735 µA. Applying Equation 2 to the Current_LSB and selected value for the shunt resistor results in a shunt calibration register setting of 4050d (FD2h). Failure to set the value of the shunt calibration register will result in a zero value for any result based on current.

8.2.2.4 Set Desired Fault Thresholds

Fault thresholds are set by programming the desired trip threshold into the corresponding fault register. The list of supported fault registers is shown in Table 7-1. Since the fault limit registers are 16 bits in length, the effective LSB size for these registers is 16 times greater than the corresponding 20 bit LSB used in calculating returned values for bus voltage and current.

An over current threshold is set by programming the shunt over voltage limit register (SOVL). The voltage that needs to be programmed into this register is calculated by multiplying the over current threshold by the shunt resistor. In this example the over current threshold is 10 A and the value of the current sense resistor is 16.2 mΩ, which give a shunt voltage limit of 162 mV. Once the shunt voltage limit is known, the value for the shunt over voltage limit register is calculated by dividing the shunt voltage limit by the shunt voltage LSB size.

In this example, the calculated value of the shunt over voltage limit register is 162 mV / (312.5 nV × 16) = 32400d (7E90h).

An over voltage fault threshold on the bus voltage is set by programming the bus over voltage limit register (BOVL). In this example the desired over voltage threshold is 52 V. The value that needs to be programmed into this register is calculated by dividing the target threshold voltage by the bus voltage fault limit LSB value of 3.125 mV. For this example, the target value for the BOVL register is 52 V / (195.3125 µV × 16) = 16640d (4100h).

Copyright © 2021 Texas Instruments Incorporated

When setting the power over-limit value, the LSB size used to calculate the value needed in the limit registers will be 256 times greater than the power LSB. This is because the power register is a 24 bits in length while the power fault limit register is 16 bits.

Values stored in the alert limit registers are set to the default values after V_S power cycle events and need to be reprogrammed each time power is applied.

8.2.2.5 Calculate Returned Values

Parametric values are calculated by multiplying the returned value by the LSB value. Table 8-4 below shows the returned values for this application example assuming the design requirements shown in Table 8-3.

Table 8-4. Calculating Returned Values

PARAMETER	Returned Value	LSB Value	Calculated Value
Shunt voltage (V)	311040d	312.5 nV/LSB	0.0972 V
Current (A)	314572d	10 A/ 2^{19} = 19.073486 µA/LSB	6 A
Bus voltage (V)	245760d	195.3125 µV/LSB	48 V
Power (W)	4718604d	Current LSB x 3.2 = 61.035156 µW/LSB	288 W
Energy (J)	1061683200d	Power LSB x 16 = 976.5625 µJ/LSB	1036800 J
Charge (C)	1132462080d	Current LSB = 19.073486 µC/LSB	21600 C
Temperature (°C)	3200d	7.8125 m°C/LSB	25°C

Shunt Voltage, Current, Bus Voltage (positive only), Charge, and Temperature return values in two's complement format. In two's complement format a negative value in binary is represented by having a 1 in the most significant bit of the returned value. These values can be converted to decimal by first inverting all the bits and adding 1 to obtain the unsigned binary value. This value should then be converted to decimal with the negative sign applied. For example, assume a shunt voltage reading returns 1011 0100 0001 0000 0000. This is a negative value due to the MSB having a value of one. Inverting the bits and adding one results in 0100 1011 1111 0000 0000 (311040d) which from the shunt voltage example in Table 8-4 correlates to a voltage of 97.2 mV. Since the returned value was negative the measured shunt voltage value is -97.2 mV.

8.2.3 Application Curves

Figure 8-3 and Figure 8-4 show the ALERT pin response to a bus overvoltage fault with a conversion time of 50 µs, averaging set to 1, and the SLOWALERT bit set to 0 for bus only conversions. For these scope shots, persistence was enabled on the ALERT channel to show the variation in the alert response for many sequential fault events. If the magnitude of the fault is sufficient the ALERT response can be as fast as one quarter of the ADC conversion time as shown in Figure 8-3. For fault conditions that are just exceeding the limit threshold, the response time for the ALERT pin can vary from approximately 0.5 to 1.5 conversion cycles as shown in Figure 8-4. Variation in the alert response exists because the external fault event is not synchronized to the internal ADC conversion start. Also the ADC is constantly sampling to get a result, so the response time for fault events starting from zero will slower than fault events starting from values near the set fault threshold. Since the timing of the alert can be difficult to predict, applications where the alert timing is critical should assume a alert response equal to 1.5 times the ADC conversion time for bus voltage or shunt voltage only conversions.

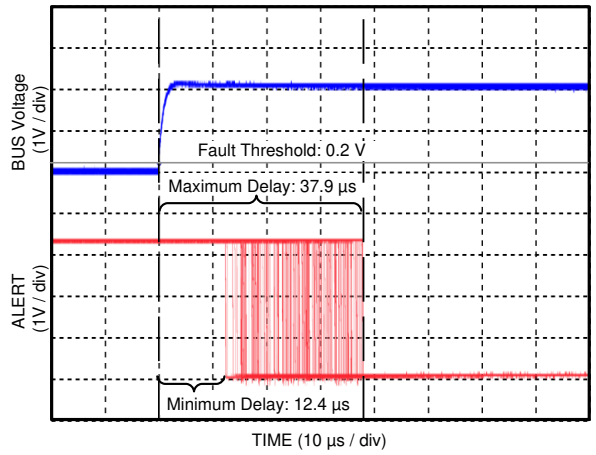

Figure 8-3. Alert Response Time (Sampled Values Significantly Above Threshold)

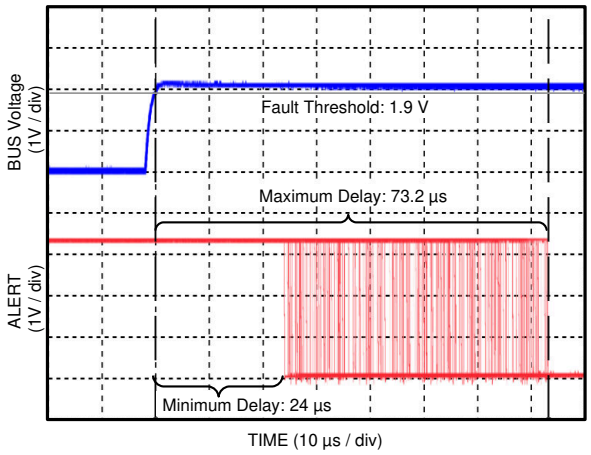

Figure 8-4. Alert Response Time (Sampled Values Slightly Above Threshold)

Copyright © 2021 Texas Instruments Incorporated

9 Power Supply Recommendations

The input circuitry of the device can accurately measure signals on common-mode voltages beyond its power-supply voltage, V_S. For example, the voltage applied to the V_S power supply terminal can be 5 V, whereas the load power-supply voltage being monitored (the common-mode voltage) can be as high as 85 V. Note that the device can also withstand the full 0 V to 85 V range at the input terminals, regardless of whether the device has power applied or not. Avoid applications where the GND pin is disconnected while device is actively powered.

Place the required power-supply bypass capacitors as close as possible to the supply and ground terminals of the device. A typical value for this supply bypass capacitor is 0.1 µF. Applications with noisy or high-impedance power supplies may require additional decoupling capacitors to reject power-supply noise.

10 Layout

10.1 Layout Guidelines

Connect the input pins (IN+ and IN–) to the sensing resistor using a Kelvin connection or a 4-wire connection. This connection technique ensures that only the current-sensing resistor impedance is sensed between the input pins. Poor routing of the current-sensing resistor commonly results in additional resistance present between the input pins. Given the very low ohmic value of the current-sensing resistor, any additional high-current carrying impedance causes significant measurement errors. Place the power-supply bypass capacitor as close as possible to the supply and ground pins.

10.2 Layout Example

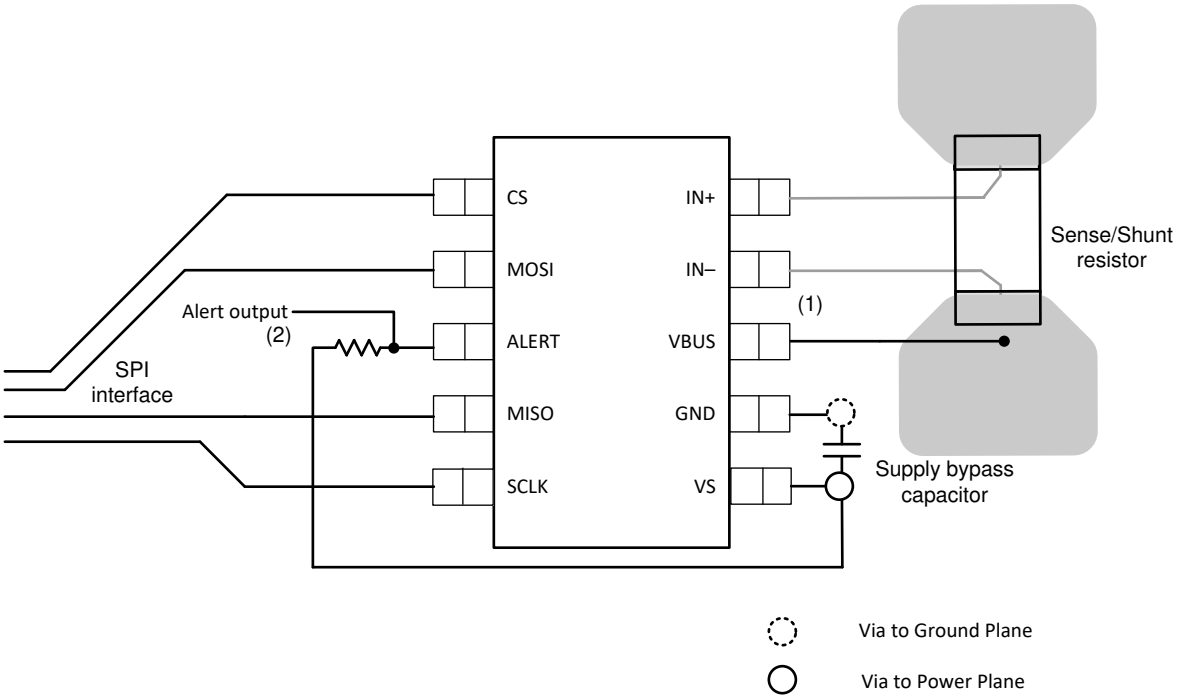

(1) Connect the VBUS pin to the voltage powering the load for load power calculations..
(2) Can be left floating if unused.

Figure 10-1. INA229-Q1 Layout Example

11 Device and Documentation Support

11.1 Receiving Notification of Documentation Updates

To receive notification of documentation updates, navigate to the device product folder on ti.com. Click on *Subscribe to updates* to register and receive a weekly digest of any product information that has changed. For change details, review the revision history included in any revised document.

11.2 Support Resources

TI E2E™ support forums are an engineer's go-to source for fast, verified answers and design help — straight from the experts. Search existing answers or ask your own question to get the quick design help you need.

Linked content is provided "AS IS" by the respective contributors. They do not constitute TI specifications and do not necessarily reflect TI's views; see TI's Terms of Use.

11.3 Trademarks

TI E2E™ is a trademark of Texas Instruments.
All trademarks are the property of their respective owners.

11.4 Electrostatic Discharge Caution

This integrated circuit can be damaged by ESD. Texas Instruments recommends that all integrated circuits be handled with appropriate precautions. Failure to observe proper handling and installation procedures can cause damage.

ESD damage can range from subtle performance degradation to complete device failure. Precision integrated circuits may be more susceptible to damage because very small parametric changes could cause the device not to meet its published specifications.

11.5 Glossary

TI Glossary	This glossary lists and explains terms, acronyms, and definitions.

12 Mechanical, Packaging, and Orderable Information

The following pages include mechanical, packaging, and orderable information. This information is the most current data available for the designated devices. This data is subject to change without notice and revision of this document. For browser-based versions of this data sheet, refer to the left-hand navigation.

Copyright © 2021 Texas Instruments Incorporated

PACKAGING INFORMATION

Orderable part number	Status (1)	Material type (2)	Package | Pins	Package qty | Carrier	RoHS (3)	Lead finish/ Ball material (4)	MSL rating/ Peak reflow (5)	Op temp (°C)	Part marking (6)
INA229AQDGSRQ1	Active	Production	VSSOP (DGS) | 10	2500 | LARGE T&R	Yes	SN	Level-2-260C-1 YEAR	-40 to 125	229Q
INA229AQDGSRQ1.A	Active	Production	VSSOP (DGS) | 10	2500 | LARGE T&R	Yes	SN	Level-2-260C-1 YEAR	-40 to 125	229Q

(1) **Status:** For more details on status, see our product life cycle.

(2) **Material type:** When designated, preproduction parts are prototypes/experimental devices, and are not yet approved or released for full production. Testing and final process, including without limitation quality assurance, reliability performance testing, and/or process qualification, may not yet be complete, and this item is subject to further changes or possible discontinuation. If available for ordering, purchases will be subject to an additional waiver at checkout, and are intended for early internal evaluation purposes only. These items are sold without warranties of any kind.

(3) **RoHS values:** Yes, No, RoHS Exempt. See the TI RoHS Statement for additional information and value definition.

(4) **Lead finish/Ball material:** Parts may have multiple material finish options. Finish options are separated by a vertical ruled line. Lead finish/Ball material values may wrap to two lines if the finish value exceeds the maximum column width.

(5) **MSL rating/Peak reflow:** The moisture sensitivity level ratings and peak solder (reflow) temperatures. In the event that a part has multiple moisture sensitivity ratings, only the lowest level per JEDEC standards is shown. Refer to the shipping label for the actual reflow temperature that will be used to mount the part to the printed circuit board.

(6) **Part marking:** There may be an additional marking, which relates to the logo, the lot trace code information, or the environmental category of the part.

Multiple part markings will be inside parentheses. Only one part marking contained in parentheses and separated by a "~" will appear on a part. If a line is indented then it is a continuation of the previous line and the two combined represent the entire part marking for that device.

Important Information and Disclaimer: The information provided on this page represents TI's knowledge and belief as of the date that it is provided. TI bases its knowledge and belief on information provided by third parties, and makes no representation or warranty as to the accuracy of such information. Efforts are underway to better integrate information from third parties. TI has taken and continues to take reasonable steps to provide representative and accurate information but may not have conducted destructive testing or chemical analysis on incoming materials and chemicals. TI and TI suppliers consider certain information to be proprietary, and thus CAS numbers and other limited information may not be available for release.

In no event shall TI's liability arising out of such information exceed the total purchase price of the TI part(s) at issue in this document sold by TI to Customer on an annual basis.

OTHER QUALIFIED VERSIONS OF INA229-Q1 :

- Catalog : INA229

NOTE: Qualified Version Definitions:

- Catalog - TI's standard catalog product

TAPE AND REEL INFORMATION

REEL DIMENSIONS

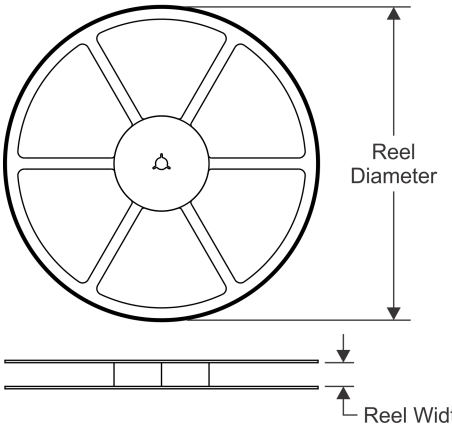

TAPE DIMENSIONS

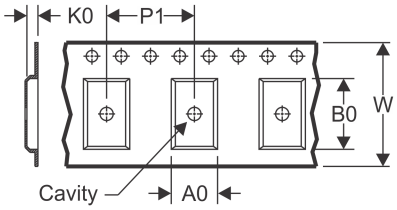

A0	Dimension designed to accommodate the component width
B0	Dimension designed to accommodate the component length
K0	Dimension designed to accommodate the component thickness
W	Overall width of the carrier tape
P1	Pitch between successive cavity centers

QUADRANT ASSIGNMENTS FOR PIN 1 ORIENTATION IN TAPE

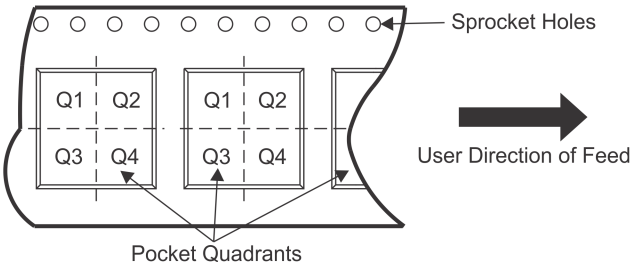

*All dimensions are nominal

Device	Package Type	Package Drawing	Pins	SPQ	Reel Diameter (mm)	Reel Width W1 (mm)	A0 (mm)	B0 (mm)	K0 (mm)	P1 (mm)	W (mm)	Pin1 Quadrant
INA229AQDGSRQ1	VSSOP	DGS	10	2500	330.0	12.4	5.3	3.4	1.4	8.0	12.0	Q1

TAPE AND REEL BOX DIMENSIONS

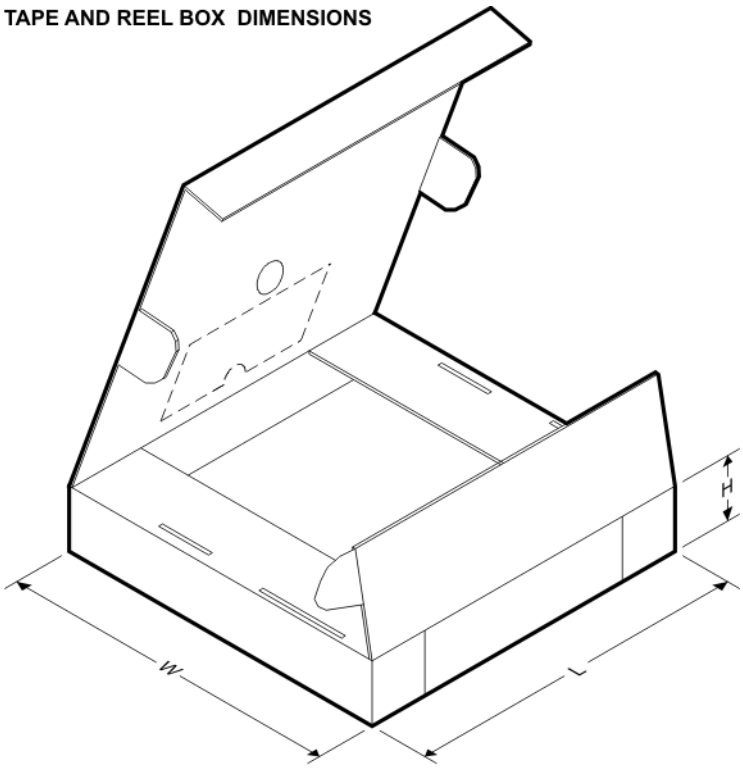

*All dimensions are nominal

Device	Package Type	Package Drawing	Pins	SPQ	Length (mm)	Width (mm)	Height (mm)
INA229AQDGSRQ1	VSSOP	DGS	10	2500	366.0	364.0	50.0

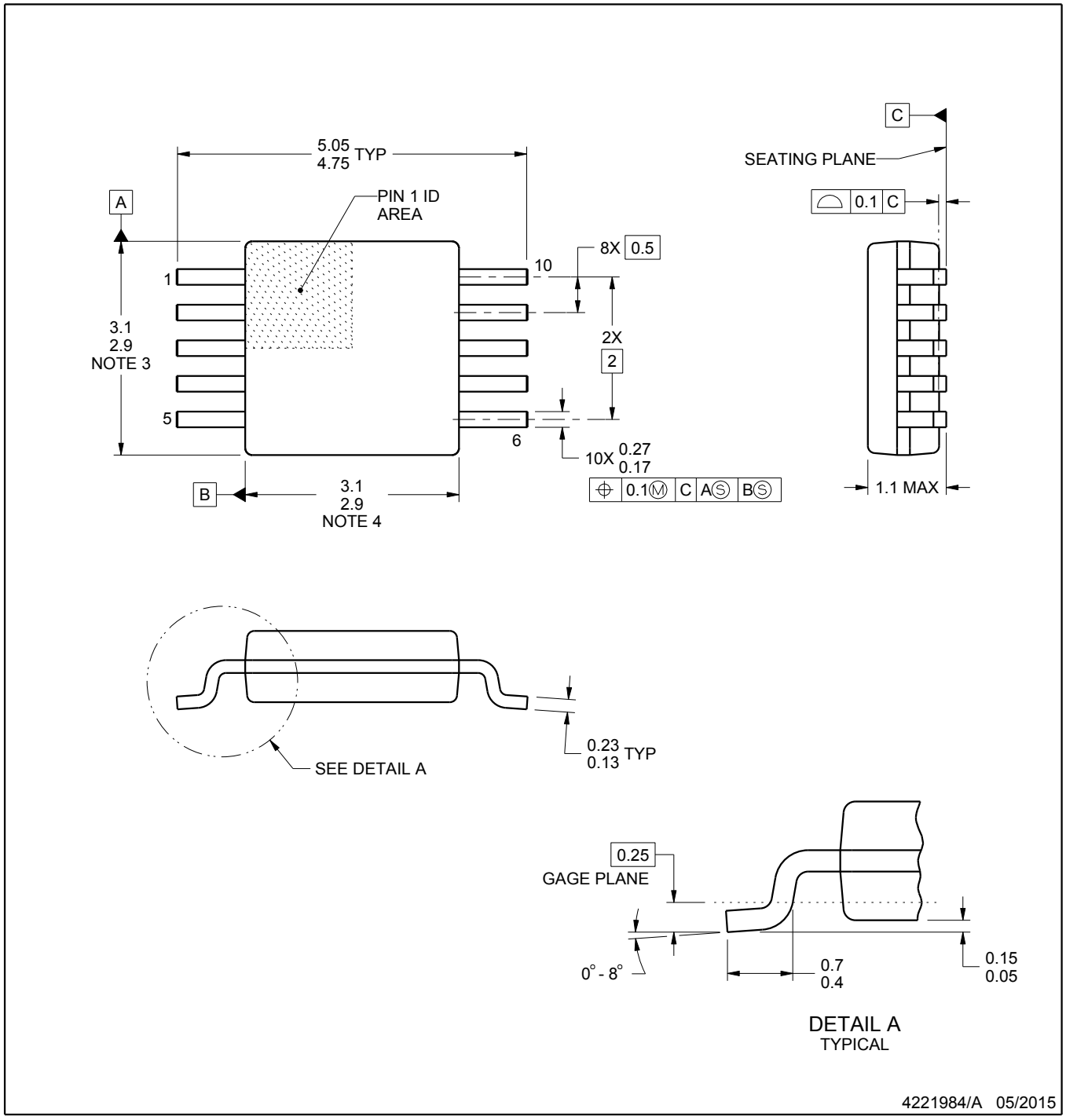

NOTES:

1. All linear dimensions are in millimeters. Any dimensions in parenthesis are for reference only. Dimensioning and tolerancing per ASME Y14.5M.
2. This drawing is subject to change without notice.
3. This dimension does not include mold flash, protrusions, or gate burrs. Mold flash, protrusions, or gate burrs shall not exceed 0.15 mm per side.
4. This dimension does not include interlead flash. Interlead flash shall not exceed 0.25 mm per side.
5. Reference JEDEC registration MO-187, variation BA.

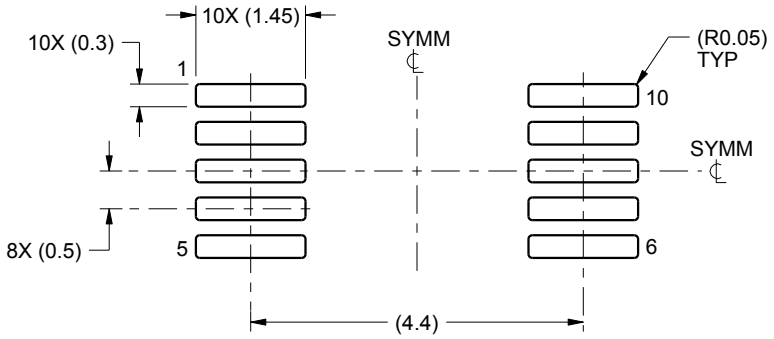

LAND PATTERN EXAMPLE
SCALE:10X

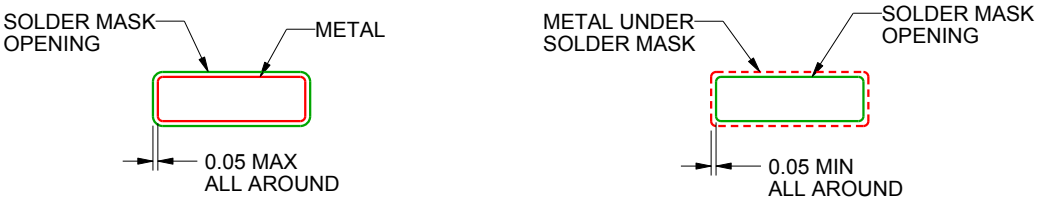

NON SOLDER MASK
DEFINED

SOLDER MASK
DEFINED

SOLDER MASK DETAILS
NOT TO SCALE

4221984/A 05/2015

NOTES: (continued)

6. Publication IPC-7351 may have alternate designs.
7. Solder mask tolerances between and around signal pads can vary based on board fabrication site.

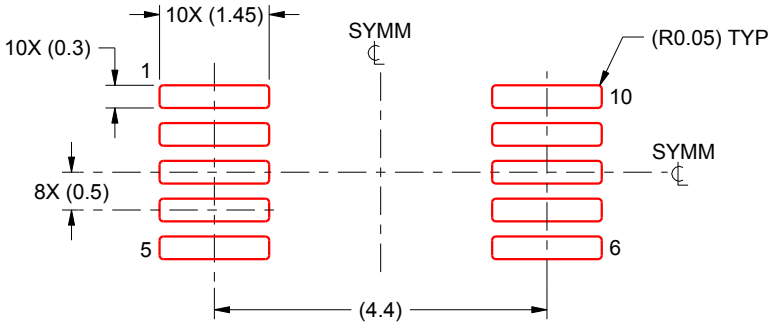

SOLDER PASTE EXAMPLE
BASED ON 0.125 mm THICK STENCIL
SCALE:10X

4221984/A 05/2015

NOTES: (continued)

8. Laser cutting apertures with trapezoidal walls and rounded corners may offer better paste release. IPC-7525 may have alternate design recommendations.
9. Board assembly site may have different recommendations for stencil design.

IMPORTANT NOTICE AND DISCLAIMER

TI PROVIDES TECHNICAL AND RELIABILITY DATA (INCLUDING DATASHEETS), DESIGN RESOURCES (INCLUDING REFERENCE DESIGNS), APPLICATION OR OTHER DESIGN ADVICE, WEB TOOLS, SAFETY INFORMATION, AND OTHER RESOURCES “AS IS” AND WITH ALL FAULTS, AND DISCLAIMS ALL WARRANTIES, EXPRESS AND IMPLIED, INCLUDING WITHOUT LIMITATION ANY IMPLIED WARRANTIES OF MERCHANTABILITY, FITNESS FOR A PARTICULAR PURPOSE OR NON-INFRINGEMENT OF THIRD PARTY INTELLECTUAL PROPERTY RIGHTS.

These resources are intended for skilled developers designing with TI products. You are solely responsible for (1) selecting the appropriate TI products for your application, (2) designing, validating and testing your application, and (3) ensuring your application meets applicable standards, and any other safety, security, regulatory or other requirements.

These resources are subject to change without notice. TI grants you permission to use these resources only for development of an application that uses the TI products described in the resource. Other reproduction and display of these resources is prohibited. No license is granted to any other TI intellectual property right or to any third party intellectual property right. TI disclaims responsibility for, and you fully indemnify TI and its representatives against any claims, damages, costs, losses, and liabilities arising out of your use of these resources.

TI’s products are provided subject to TI’s Terms of Sale, TI’s General Quality Guidelines, or other applicable terms available either on ti.com or provided in conjunction with such TI products. TI’s provision of these resources does not expand or otherwise alter TI’s applicable warranties or warranty disclaimers for TI products. Unless TI explicitly designates a product as custom or customer-specified, TI products are standard, catalog, general purpose devices.

TI objects to and rejects any additional or different terms you may propose.

Copyright © 2025, Texas Instruments Incorporated

Last updated 10/2025